www.wontec.com.cn万臣

Scan the QR code for 3D models and application examples

High-Sensitivity Liquid Level Sensor
WTLLS-B



High-Sensitivity Liquid Level Sensor WTLLS-B High-Sensitivity
High-sensitivity capacitive sensing for micro-volume pipetting.

PRODUCT FEATURES
PRODUCT ADVANTAGES

Supply: 5 V DC

Adaptive environmental baseline compensation

Compact size: 28 x 17 x 4.5 mm (with housing)

Insulated enclosure; slim, durable construction

Power consumption <1 W

Operating temperature: -40 to 85°C (industrial grade)

One level-trigger output; compatible with intelligent motor drivers

Detects volumes as low as 5 µL, depending on the medium;

reliable operation at 20 µL

Communication:

RS485 for sensitivity and address adjustment when required

DIMENSIONAL DRAWING

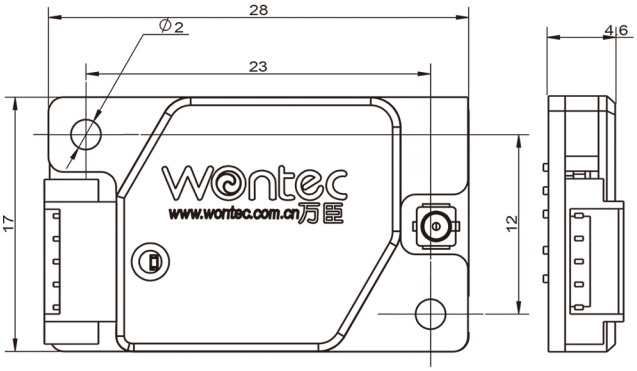



After wiring, one brief LED flash at power-up indicates correct connection.
One brief LED flash on liquid contact confirms successful detection.

USER INTERFACES

Connector	Pin	Name	Pin Description
TERMINAL DESCRIPTION	Pin 1	P1	+5 V Supply: Brown
	Pin 1	P1	Supply GND: Blue
	Pin 1	P1	OUT: White
	Pin 1	P1	RS485- / B: Black
	Pin 1	P1	RS485+ / A: Red
	Core	P2	Level-sensing lead
	Shell	P2	Level-sensing shield ground