Scan the QR code for 3D models and application examples

Feedback Liquid Level Sensor
WTLLS-C



WTLLS-C Feedback Liquid Level Sensor
Feedback capacitive sensing provides reliable closed-loop control.

PRODUCT FEATURES
PRODUCT ADVANTAGES

Supply: 5 V DC

Adaptive environmental baseline compensation

Compact size: 28 x 17 x 4.5 mm (with housing)

Insulated enclosure; slim, durable construction

Power consumption <1 W

Operating temperature: -40 to 85°C (industrial grade)

Two level-trigger outputs and two communication lines

Detects volumes as low as 5 µL, depending on the medium;
reliable operation at 20 µL

RS485/CAN interface for sensitivity, address and other settings

DIMENSIONAL DRAWING

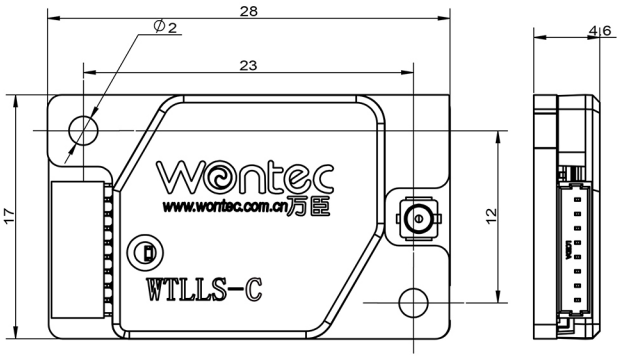



After wiring, one brief LED flash at power-up indicates correct connection.
One brief LED flash on liquid contact confirms successful detection.

USER INTERFACES

Connector	Pin	Name	Pin Description
TERMINAL DESCRIPTION	Pin 1	P1	5 V: Power
	Pin 2	P1	GND:GND
	Pin3	P1	OUT1: Liquid Entry
	Pin 4	P1	OUT2: Liquid Exit
	Pin 5	P1	485A
	Pin 6	P1	485B
	Pin 7	P1	CAN-L
	Pin 8	P1	CAN-H
	Core	P2	Level-sensing lead
	Shell	P2	Level-sensing shield ground