www.wontec.com.cn万臣

Scan the QR code for 3D models and application examples

Feedback Liquid Level Sensor
WTLLS-C Vertical



WTLLS-C Vertical Feedback Sensor

Feedback capacitive sensing provides reliable closed-loop control.

PRODUCT FEATURES
PRODUCT ADVANTAGES

Supply: 5 V DC

Adaptive environmental baseline compensation

Compact size: 34.8 x 17 x 10.5 mm (with housing)

Insulated enclosure; slim, durable construction

Power consumption <1 W

Operating temperature: -40 to 85°C (industrial grade)

Two level-trigger outputs and two communication lines

Detects volumes as low as 5 µL, depending on the medium;

reliable operation at 20 µL

RS485/PA2.0 interface for sensitivity, address and other settings

DIMENSIONAL DRAWING

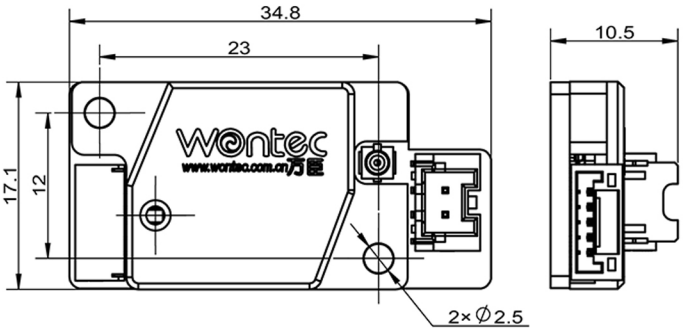



USER INTERFACES

Connector	Pin	Name	Pin Description
TERMINAL DESCRIPTION	Pin 1	P1	5 V: Power
	Pin 2	P1	GND:GND
	Pin3	P1	OUT1
	Pin 4	P1	485B
	Pin 5	P1	485A
	Core	P2	Level-sensing lead
	Shell	P2	Level-sensing shield ground
	Pin1	P3	IPEX
	Pin2	P3	GND