Address: 4/F, Building 12, Rundongsheng Industrial Park, Longteng Community,
Xixiang Subdistrict, Bao'an District, Shenzhen 518101, China
Tel: +86-755-2757 2026 / 2757 2117 / 2758 8087
Fax: +86-755-2758 8780
Web: www.wontec.com.cn
E-mail: wontec@wontec.com.cn / sz-just@163.com

WONTEC TECHNOLOGY

WWW.WONTEC.COM.CN

wontec
www.wontec.com.cn万臣

Motion Module Solutions for Medical Devices



COMPANY BROCHURE

2026
www.wontec.com.cn



About Us

COMPANY PROFILE

Shenzhen Wontec Technology Co., Ltd. specializes in the precise integration of motion and transmission products. We supply high-quality, cost-effective products to the medical device and automation industries, and provide one-stop support for our customers' R&D and component selection.



Quality & Excellence

To assure product quality and create core value for our customers, we are ISO 9001 certified and strictly follow its requirements.

With quality service and leading-edge technology, we provide our customers with environmentally friendly products.

Products & Services

A.

IVD Instrument Needles:

Sampling, aspiration, sample and wash needles for biochemistry, chemiluminescence and hematology analyzers. Nano-grade polishing of inner and outer walls; inner diameter down to 0.1 mm.

B.

Surface Treatment:

PTFE (Teflon) coating, low-temperature black chrome plating (Raydent), super-hydrophobic inner and outer surfaces.

C.

Servo & Stepper Products:

Full range of torque-mode electric grippers, rotary grippers and integrated drive motors. Compatible with CANopen, CAN, RS485 and Modbus protocols; I/O control also supported.

D.

Liquid Level Detection Modules:

Anti-interference, high-sensitivity and communication-feedback types to suit different applications. Self-adapts to the base capacitance of any needle or tip for greater versatility.

E.

Linear Motion Products:

Hollow ball splines in sizes 8, 10, 12, 13 and 16 kept in stock; miniature stainless-steel linear guides; miniature precision bearings.

F.

Sampling Modules:

ZR and XZ sampling modules for medical devices, with bus interface, liquid level detection and precision aspiration needle. Dimensions can be customized to customer requirements.

G.

Machining Capabilities:

4-axis CNC machining centers, CNC lathes, CNC gear hobbing machines, 5-axis Swiss-type lathes, OD polishers, abrasive flow polishers, cylindrical grinders, surface grinders, wire EDM and more.

H.

Embedded Trackballs:

Full range of trackball sizes: 16, 19, 25, 30, 36, 38, 50 mm and more.

Wontec Products Overview

CONTENTS



Medical Sampling Needles P.01



Medical Stirring Paddles P.08



Liquid Level Sensors P.11

- *Feedback type (WTLLS-C, WTLLS-FFC)* P.11
- *Feedback type (WTLLS-C SMD version, ultrasonic driver board)* P.12
- *Feedback type (WTLLS-C horizontal / vertical)* P.13
- *Feedback type (WTLLS-C PRO, WTLLS-C PLUS)* P.14
- *Integrated pipetting control board* P.15
- *Typical wiring for liquid level detection* P.16



Smart Electric Grippers P.17

- *WTEC20 series* P.19
- *WTEC28 series* P.21
- *WTEC42 series* P.22



Rotary Electric Grippers P.23

- *WTEX 28* P.23
- *WTET 28* P.23



Integrated Smart Stepper Motors P.25



Plunger Pumps with Integrated Driver P.27



Involute Spline & Gear Sets P.29



Rack Ball Splines P.30



Sliding Rack Assemblies P.31



Rotary Ball Splines P.32



Ball Screws P.33



Miniature Linear Guides P.34



Precision Ball Splines P.35

- *Dimensions* P.39



XZ Pipetting Arm P.41



ZR Sampling Module P.42



Precision Bearings P.44



Trackballs for Ultrasound Systems P.45

Medical Sampling Needles

① Wipe-wash needle ② Piercing sampling needle ③ Dispensing needle (heated) ④ Dispensing needle
⑤ Open sampling needle ⑥ Aspirate/dispense needle ⑦ Sample needle ⑧ Ultrasonic needle

Product Features

PRODUCT ADVANTAGES

Sampling and wash needles for chemiluminescence, hematology, biochemistry and urine analyzers.

Materials: 304, 316L or pure titanium.

Inner wall precision-lapped by abrasive flow polishing to a mirror finish.

Tapered (reduced-diameter) tip available to minimize carry-over.

Wontec has mastered inner-wall polishing, bending and spinning for SUS tubing of all sizes, meeting the full range of customer requirements for sampling needles and similar products.



Element	ASTM A276/A276M-2024a 316L chemical composition requirement (%)	Measured (%)
Carbon (C)	≤0.030	0.0291
Sulfur (S)	≤0.030	0.0011
Silicon (Si)	≤1.00	0.375
Manganese (Mn)	≤2.00	0.981
Phosphorus (P)	≤0.045	<0.0400
Chromium (Cr)	16.0~18.0	17.18
Nickel (Ni)	12.0~15.0	12.06
Molybdenum (Mo)	2.00~3.00	2.09

www.wontec.com.cn

Imported 316L Tubing Specifications (mm)

No.	Description	Size (OD × ID)	OD tol.	ID tol.	Stock length	No.	Description	Size (OD × ID)	OD tol.	ID tol.	Stock length
1	316L SS tube	0.3*0.1	+/-0.01	(+0.03，0)	1000	62	316L SS tube	1.7*1.3	+/-0.015	(+0.03，0)	1000
2	316L SS tube	0.7*0.4	+/-0.01	(+0.03，0)	1000	63	316L SS tube	1.7*1.35	+/-0.015	(+0.03，0)	1000
3	316L SS tube	0.8*0.16	+/-0.01	(+0.01，-0.01)	1000	64	316L SS tube	1.7*1.37	+/-0.015	(+0.03，0)	1000
4	316L SS tube	0.8*0.6	+/-0.01	(+0.03，0)	1000	65	316L SS tube	1.7*1.4	+/-0.015	(+0.03，0)	1000
5	316L SS tube	0.81*0.4	+/-0.01	(+0.01，-0.01)	1000	66	316L SS tube	1.7*1.5	+/-0.015	(+0.03，0)	1000
6	316L SS tube	0.81*0.51	+/-0.01	(+0.01，-0.01)	1000	67	316L SS tube	1.74*1.3	+/-0.015	(+0.03，0)	1000
7	316L SS tube	1*0.2	+/-0.01	(+0.03，0)	1000	68	316L SS tube	1.75*1	+/-0.015	(+0.03，0)	1000
8	316L SS tube	1*0.3	+/-0.01	(+0.03，0)	1000	69	316L SS tube	1.75*1.4	+/-0.015	(+0.03，0)	1000
9	316L SS tube	1*0.6	+/-0.01	(+0.03，0)	1000	70	316L SS tube	1.75*1.5	+/-0.015	(+0.03，0)	1000
10	316L SS tube	1*0.7	+/-0.01	(+0.03，0)	1000	71	316L SS tube	1.8*0.6	+/-0.015	(+0.03，0)	1000
11	316L SS tube	1.02*0.3	+/-0.01	(+0.03，0)	1000	72	316L SS tube	1.8*0.8	+/-0.015	(+0.03，0)	1000
12	316L SS tube	1.09*0.58	+/-0.015	(+0.03，0)	1000	73	316L SS tube	1.8*1	+/-0.015	(+0.03，0)	1000
13	316L SS tube	1.1*0.68	+/-0.015	(+0.03，0)	1000	74	316L SS tube	1.8*1.2	+/-0.015	(+0.03，0)	1000
14	316L SS tube	1.1*0.7	+/-0.015	(+0.03，0)	1000	75	316L SS tube	1.8*1.3	+/-0.015	(+0.03，0)	1000
15	316L SS tube	1.1*0.8	+/-0.015	(+0.03，0)	1000	76	316L SS tube	1.8*1.4	+/-0.015	(+0.03，0)	1000
16	316L SS tube	1.1*0.9	+/-0.015	(+0.03，0)	1000	77	316L SS tube	1.8*1.5	+/-0.015	(+0.03，0)	1000
17	316L SS tube	1.2*0.3	+/-0.015	(+0.03，0)	1000	78	316L SS tube	1.81*1.47	+/-0.015	(+0.02，-0.02)	1000
18	316L SS tube	1.2*0.4	+/-0.015	(+0.03，0)	1000	79	316L SS tube	1.85*1.4	+/-0.015	(+0.03，0)	1000
19	316L SS tube	1.2*0.5	+/-0.015	(+0.03，0)	1000	80	316L SS tube	1.85*1.6	+/-0.015	(+0.03，0)	1000
20	316L SS tube	1.2*0.6	+/-0.015	(+0.03，0)	1000	81	316L SS tube	1.9*1.4	+/-0.015	(+0.03，0)	1000
21	316L SS tube	1.2*0.8	+/-0.015	(+0.03，0)	1000	82	316L SS tube	1.9*1.5	+/-0.015	(+0.03，0)	1000
22	316L SS tube	1.2*0.9	+/-0.015	(+0.03，0)	1000	83	316L SS tube	1.9*1.6	+/-0.015	(+0.03，0)	1000
23	316L SS tube	1.26*0.9	+/-0.015	(+0.03，0)	1000	84	316L SS tube	1.99*1.6	+/-0.015	(+0.03，0)	1000
24	316L SS tube	1.3*0.58	+/-0.015	(+0.03，0)	1000	85	316L SS tube	2*0.3	+/-0.015	(+0.03，0)	1000
25	316L SS tube	1.3*0.65	+/-0.015	(+0.03，0)	1000	86	316L SS tube	2*0.5	+/-0.015	(+0.03，0)	1000
26	316L SS tube	1.3*0.75	+/-0.015	(+0.03，0)	1000	87	316L SS tube	2*0.61	+/-0.015	(+0.03，0)	1000
27	316L SS tube	1.3*0.8	+/-0.015	(+0.03，0)	1000	88	316L SS tube	2*0.81	+/-0.015	(+0.03，0)	1000
28	316L SS tube	1.3*0.9	+/-0.015	(+0.03，0)	1000	89	316L SS tube	2*1	+/-0.015	(+0.03，0)	1000
29	316L SS tube	1.36*0.7	+/-0.015	(+0.03，0)	1000	90	316L SS tube	2*1.2	+/-0.015	(+0.03，0)	1000
30	316L SS tube	1.39*0.7	+/-0.015	(+0.03，0)	1000	91	316L SS tube	2*1.37	+/-0.015	(+0.03，0)	1000
31	316L SS tube	1.4*0.8	+/-0.015	(+0.03，0)	1000	92	316L SS tube	2*1.4	+/-0.015	(+0.03，0)	1000
32	316L SS tube	1.4*0.97	+/-0.015	(+0.03，0)	1000	93	316L SS tube	2*1.5	+/-0.015	(+0.03，0)	1000
33	316L SS tube	1.4*1	+/-0.015	(+0.03，0)	1000	94	316L SS tube	2*1.6	+/-0.015	(+0.03，0)	1000
34	316L SS tube	1.46*1.12	+/-0.015	(+0.03，0)	1000	95	316L SS tube	2*1.7	+/-0.015	(+0.03，0)	1000
35	316L SS tube	1.5*0.3	+/-0.015	(+0.03，0)	1000	96	316L SS tube	2*1.75	+/-0.015	(+0.03，0)	1000
36	316L SS tube	1.5*0.4	+/-0.015	(+0.03，0)	1000	97	316L SS tube	2.05*0.3	+/-0.02	(+0.03，0)	1000
37	316L SS tube	1.5*0.58	+/-0.015	(+0.03，0)	1000	98	316L SS tube	2.1*1.6	+/-0.02	(+0.03，0)	1000
38	316L SS tube	1.5*0.6	+/-0.015	(+0.03，0)	1000	99	316L SS tube	2.1*1.8	+/-0.02	(+0.03，0)	1000
39	316L SS tube	1.5*0.7	+/-0.015	(+0.03，0)	1000	100	316L SS tube	2.2*1.6	+/-0.02	(+0.03，0)	1000
40	316L SS tube	1.5*0.8	+/-0.015	(+0.03，0)	1000	101	316L SS tube	2.3*1.9	+/-0.02	(+0.03，0)	1000
41	316L SS tube	1.5*1	+/-0.015	(+0.03，0)	1000	102	316L SS tube	2.3*2	+/-0.02	(+0.03，0)	1000
42	316L SS tube	1.5*1.12	+/-0.015	(+0.03，0)	1000	103	316L SS tube	2.4*1.5	+/-0.02	(+0.03，0)	1000
43	316L SS tube	1.5*1.21	+/-0.015	(+0.03，0)	1000	104	316L SS tube	2.4*1.8	+/-0.02	(+0.03，0)	1000
44	316L SS tube	1.56*1	+/-0.015	(+0.03，0)	1000	105	316L SS tube	2.4*2	+/-0.02	(+0.03，0)	1000
45	316L SS tube	1.6*0.13	+/-0.015	(+0.03，0)	1000	106	316L SS tube	2.4*2.1	+/-0.02	(+0.03，0)	1000
46	316L SS tube	1.6*0.3	+/-0.015	(+0.03，0)	1000	107	316L SS tube	2.5*1.5	+/-0.02	(+0.03，0)	1000
47	316L SS tube	1.6*0.5	+/-0.015	(+0.03，0)	1000	108	316L SS tube	2.5*1.9	+/-0.02	(+0.03，0)	1000
48	316L SS tube	1.6*0.56	+/-0.015	(+0.03，0)	1000	109	316L SS tube	2.5*2	+/-0.02	(+0.03，0)	1000
49	316L SS tube	1.6*0.60	+/-0.015	(+0.03，0)	1000	110	316L SS tube	2.53*0.65	+/-0.02	(+0.03，0)	1000
50	316L SS tube	1.6*0.76	+/-0.015	(+0.03，0)	1000	111	316L SS tube	2.53*1.45	+/-0.02	(+0.03，0)	1000
51	316L SS tube	1.6*0.79	+/-0.015	(+0.03，0)	1000	112	316L SS tube	2.6*2	+/-0.02	(+0.03，0)	1000
52	316L SS tube	1.6*0.95	+/-0.015	(+0.03，0)	1000	113	316L SS tube	2.6*2.2	+/-0.02	(+0.03，0)	1000
53	316L SS tube	1.6*1	+/-0.015	(+0.03，0)	1000	114	316L SS tube	2.7*1.5	+/-0.02	(+0.03，0)	1000
54	316L SS tube	1.6*1.1	+/-0.015	(+0.03，0)	1000	115	316L SS tube	2.7*2.2	+/-0.02	(+0.03，0)	1000
55	316L SS tube	1.6*1.2	+/-0.015	(+0.03，0)	1000	116	316L SS tube	2.7*2.4	+/-0.02	(+0.03，0)	1000
56	316L SS tube	1.6*1.3	+/-0.015	(+0.03，0)	1000	117	316L SS tube	2.8*2.2	+/-0.02	(+0.03，0)	1000
57	316L SS tube	1.6*1.4	+/-0.015	(+0.03，0)	1000	118	316L SS tube	2.9*2	+/-0.02	(+0.03，0)	1000
58	316L SS tube	1.62*1.3	+/-0.015	(+0.03，0)	1000	119	316L SS tube	3*1.5	+/-0.02	(+0.03，0)	1000
59	316L SS tube	1.65*1.2	+/-0.015	(+0.03，0)	1000	120	316L SS tube	3*2	+/-0.02	(+0.03，0)	1000
60	316L SS tube	1.65*1.3	+/-0.015	(+0.03，0)	1000	121	316L SS tube	3*2.4	+/-0.02	(+0.03，0)	1000
61	316L SS tube	1.7*0.61	+/-0.015	(+0.03，0)	1000	122	316L SS tube	3*2.6	+/-0.02	(+0.03，0)	1000

wontec
www.wontec.com.cn万臣

Sampling Needles

Sampling and wash needles for chemiluminescence, hematology, biochemistry and urine analyzers.



Wipe-wash needle



Wash needle



Wash needle

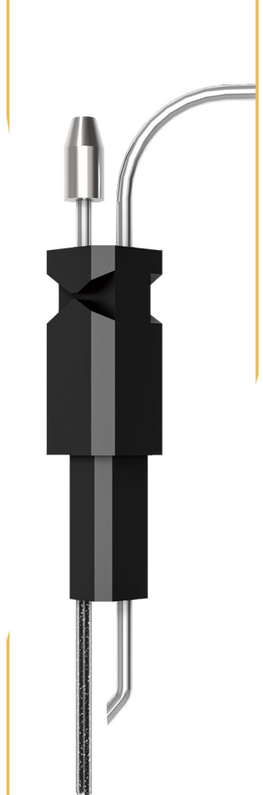

Wash needle

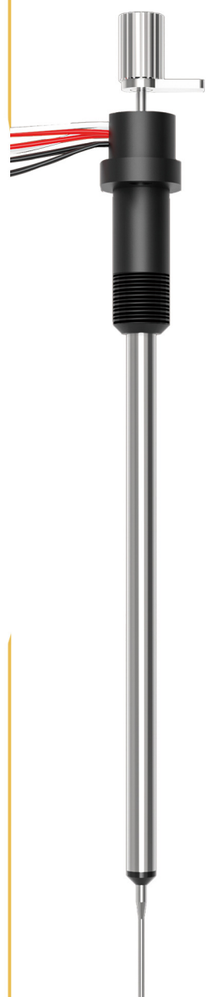

Heated needle



Heated needle



Heated needle

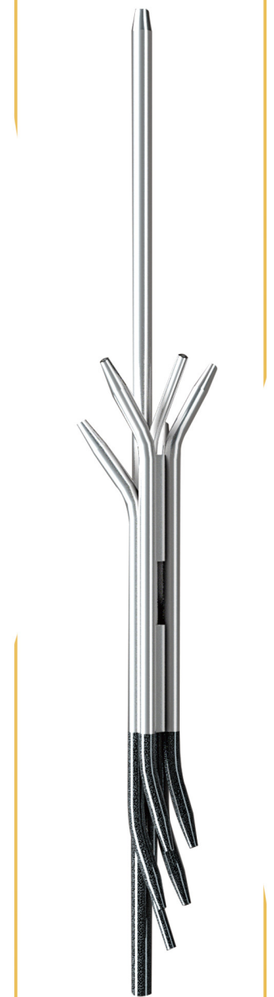

Staining needle

wontec
www.wontec.com.cn万臣

Sampling Needles

Sampling and wash needles for chemiluminescence, hematology, biochemistry and urine analyzers.



Sampling needle



Anti-collision sampling needle



Sampling needle



Sampling needle



Piercing needle



Piercing needle



Piercing needle

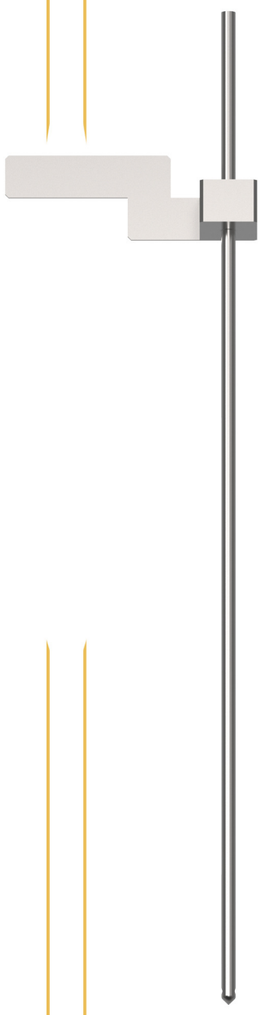

Piercing needle

wontec
www.wontec.com.cn万臣

Sampling Needles

Sampling and wash needles for chemiluminescence, hematology, biochemistry and urine analyzers.



Dispensing needle

Dispensing needle

Sample needle

Ultrasonic needle

wontec
www.wontec.com.cn万臣

Scan the QR code to download
3D models & application scenarios

Stirring Paddles

Straight-blade paddles Spiral paddles

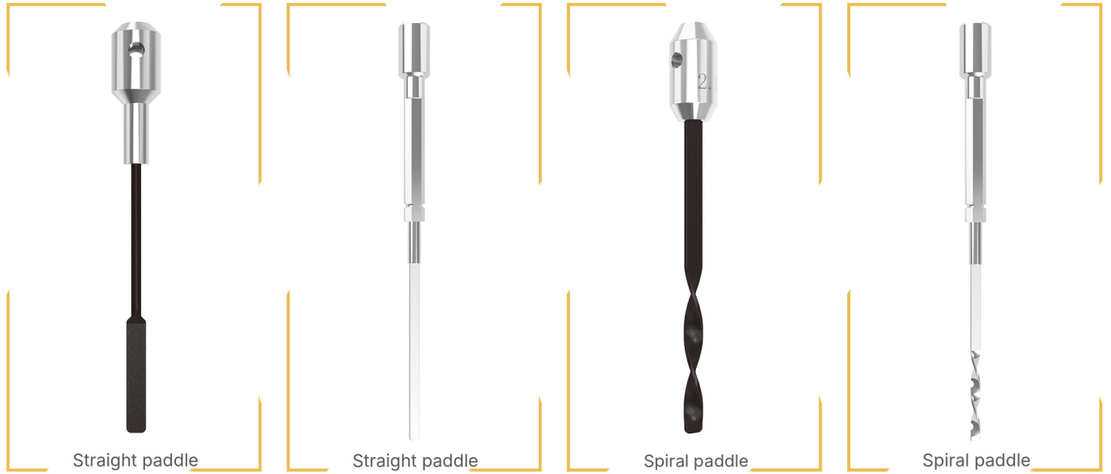

Straight paddle

Straight paddle

Spiral paddle

Spiral paddle

Product Features

PRODUCT ADVANTAGES

- Stirs high- and low-concentration liquids, forcing convection for uniform mixing and reaction.
- One-piece machined construction with excellent symmetry.
- Customizable to drawings to meet any customer requirement.
- Super-hydrophobic metal surface coating: colorless, transparent, no liquid hang-up; wear-, acid- and alkali-resistant.



Highly clean tubing for our customers

Tubing used for analysis and testing must be extremely clean; once impurities are left on the inner wall of capillary tubing in particular, they are very difficult to remove. Through strict control at the tube-making stage followed by precision polishing, Wontec supplies tubing of a consistently high standard.

Further improvement of inner-wall finish

Under the Shenzhen Science, Technology and Innovation Commission project "Key Technology R&D of High-Precision Sampling Needles for High-End IVD Equipment" (No. Zhong 2019N045), Wontec undertook the development of capillary inner-wall polishing. The project passed its mid-term review in 2021, and our inner-wall polishing performance has already exceeded the project's targets.

Wontec's inner-wall polishing comparison

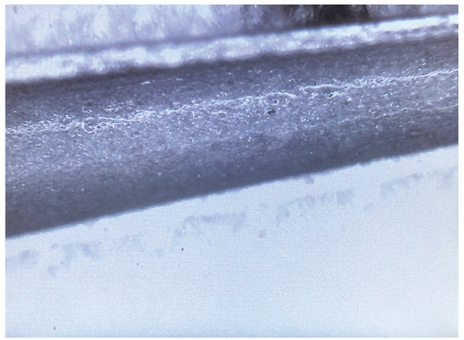

Raw tubing

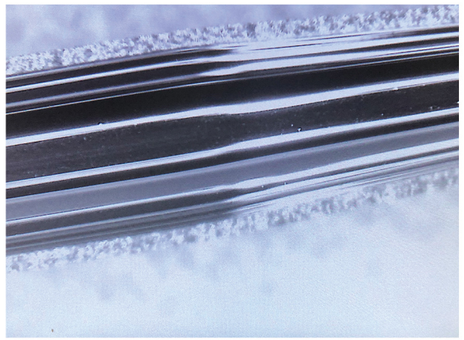

After inner-wall polishing

- **Inner-wall polishing**
- Wontec applies different inner-wall polishing techniques to mirror-polish straight and tapered tubes of various inner diameters, including ultra-fine thin-wall needle tubing with 0.1 mm ID, which likewise achieves Ra 0.05.

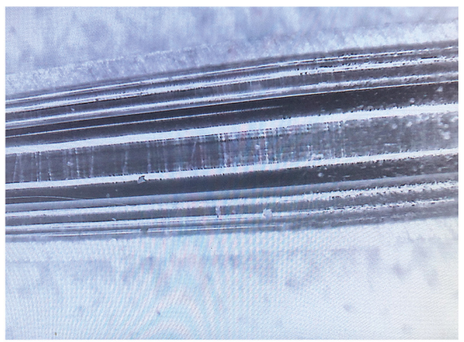

Imported sample

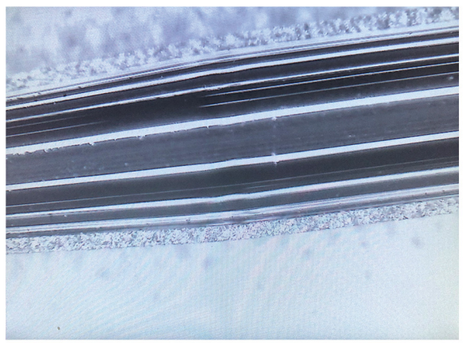

Wontec

- **Product comparison**
- Inner-wall polishing comparison between an imported tapered tube sample and a tapered tube produced by Wontec.

(C202500004301-01) 316L needle inner-surface quality test

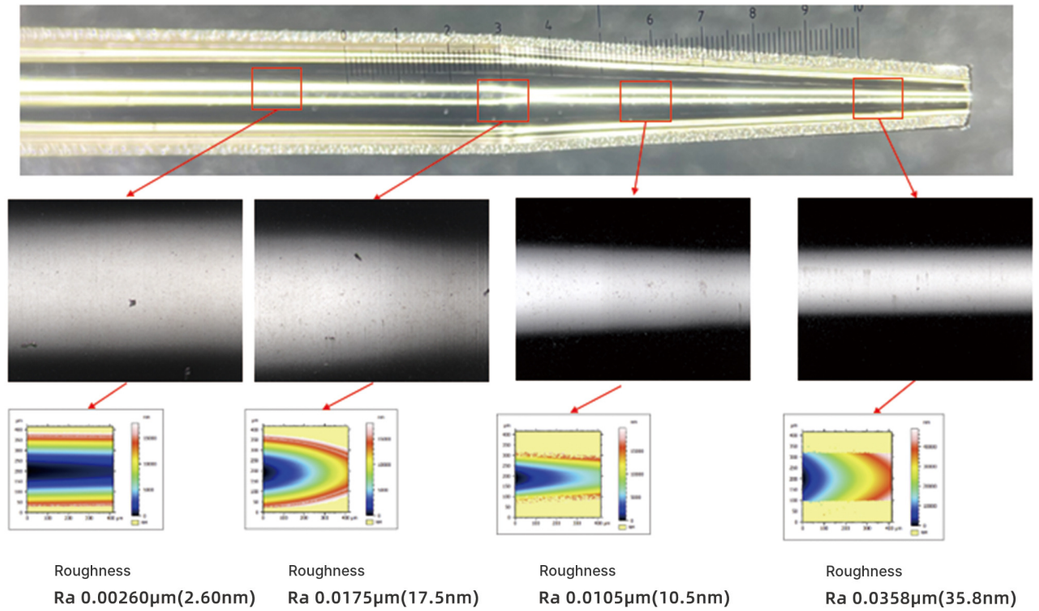

Roughness
Ra 0.00260μm(2.60nm)

Roughness
Ra 0.0175μm(17.5nm)

Roughness
Ra 0.0105μm(10.5nm)

Roughness
Ra 0.0358μm(35.8nm)

(WT10001004) 316L needle inner-surface quality test

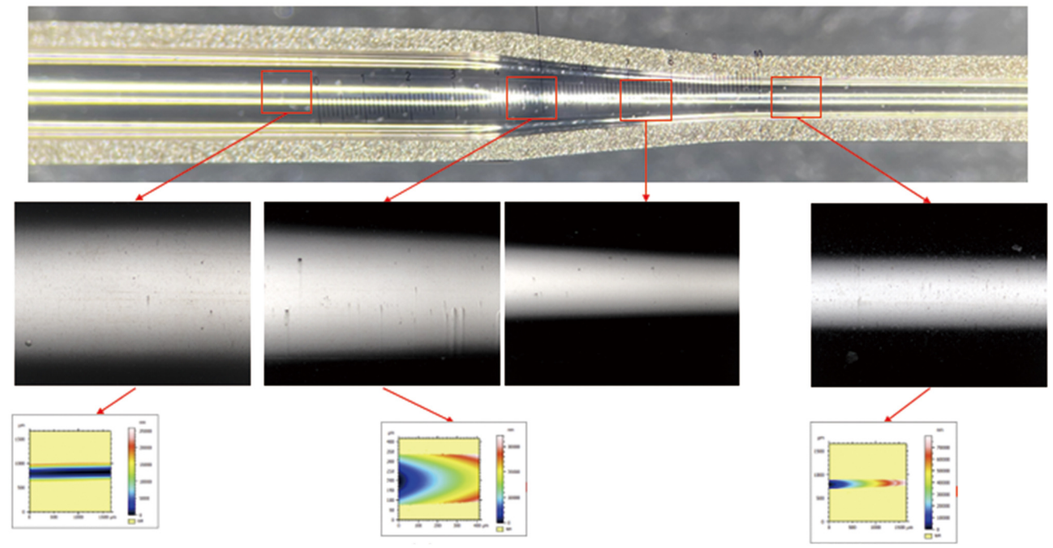

Roughness
Ra 0.00585μm(5.85nm)

Roughness
Ra 0.0391μm(39.1nm)

Roughness
Ra 0.0388μm(38.8nm

Liquid Level Sensors

WTLLS-C

Feedback-type liquid level sensor



Product Features

PRODUCT ADVANTAGES

- Input voltage: DC 5 V
- Ambient self-adaptation with auto-tare
- Compact size: 28 mm × 17 mm × 4.5 mm (incl. housing)
- Insulated mounting housing; ultra-thin, rugged and durable
- Power consumption: < 1 W
- Operating temperature: -40 to 85 °C (industrial grade)
- Two level-trigger outputs and two communication outputs
- Detection sensitivity down to 5 µL (medium-dependent);
  20 µL recommended for stable operation
- Interface: RS485/CAN (sensitivity, station ID, etc. configurable)

WTLLS-FFC

8-pin flexible FFC with snap-lock connector;
bend-resistant and space-saving

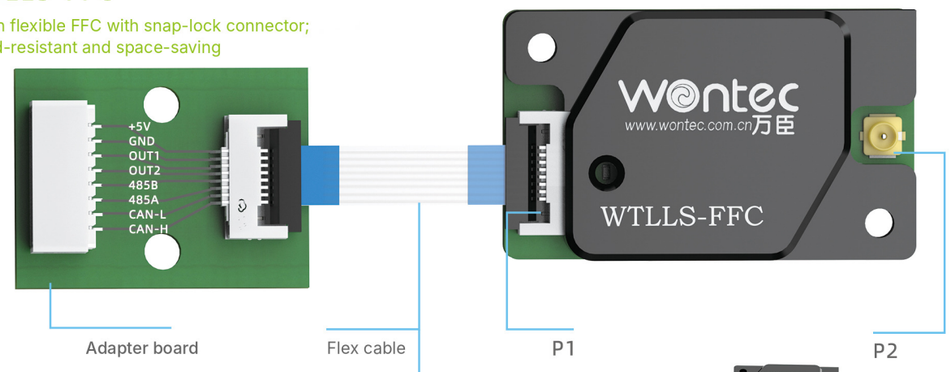



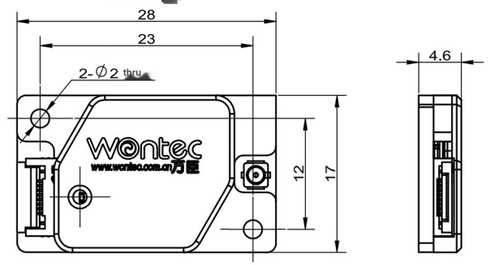

WTLLS-C SMD Version

Feedback-type liquid level sensor

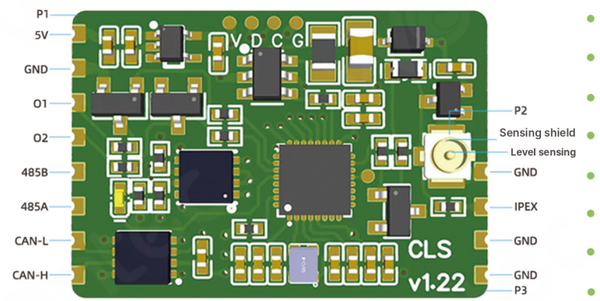

Product Features

PRODUCT ADVANTAGES

- Input voltage: DC 5 V
- Ambient self-adaptation with auto-tare
- Compact size: 24 mm × 17 mm × 4.5 mm
- Customer-defined connectors for easier integration
- Power consumption: < 1 W
- Operating temperature: -40 to 85 °C (industrial grade)
- Two level-trigger outputs and two communication outputs
- Min. detectable volume 5 µL (medium-dependent); stable above 20 µL
- Interface: RS485/CAN (sensitivity, station ID, etc. configurable)

Ultrasonic Driver Board

Product Features

PRODUCT ADVANTAGES

- New 32-bit ARM platform: high quality, cost-effective
- Multiple communication interfaces: CAN, RS485, USB, I/O
- Fully digital control
- LED status indication
- Wide frequency matching range
- Frequency tracking
- Isolated output, safe and reliable
- Harmless to the human body

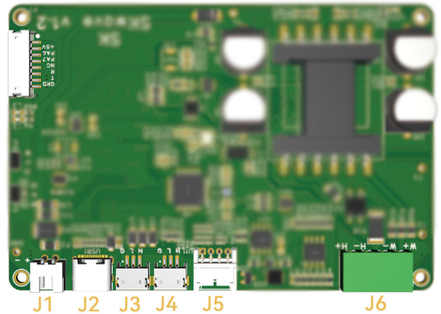

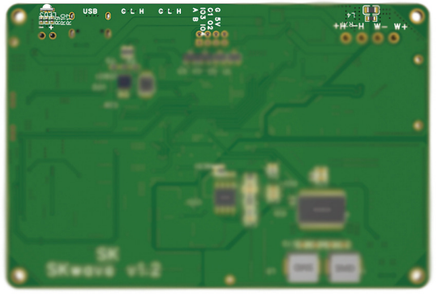

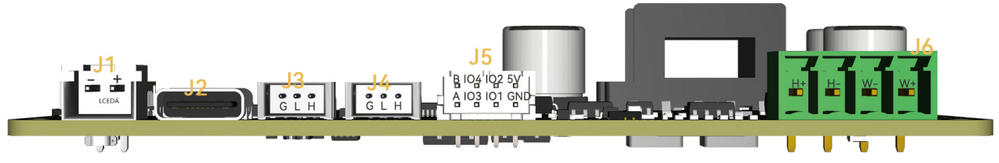



Feedback-type level sensor · WTLLS-C horizontal



Feedback-type level sensor · WTLLS-C vertical

Product Features

PRODUCT ADVANTAGES

- Feedback-type capacitive level detection; closed-loop control for higher reliability
- Input voltage: DC 5 V
- Ambient self-adaptation with auto-tare
- Horizontal: 36.8 mm × 17 mm × 6.95 mm (incl. housing)
  Vertical: 34.8 mm × 17 mm × 10.5 mm (incl. housing)
- Insulated mounting housing; ultra-thin, rugged and durable
- Power consumption: < 1 W
- Operating temperature: -40 to 85 °C (industrial grade)
- Two level-trigger signal outputs
- Detection sensitivity down to 5 µL (medium-dependent);
  20 µL recommended for stable operation
- Interface: RS485/PA2.0 (sensitivity, station ID, etc. configurable)

Dimensions

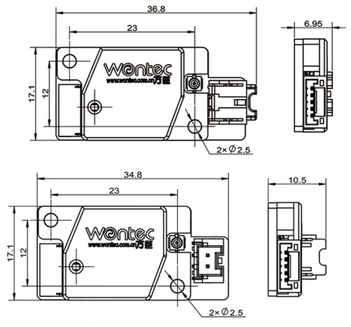

Connector Pinout

Connector	Pin	Description
P1:GH1.25-5P	Pin 1	5V: Power
	Pin 2	GND:GND
	Pin3	OUT1
	Pin 4	485B
	Pin 5	485A
P2: IPEX Gen 1	Core	Level sensing wire
	Shell	Sensing shield ground
P3：PA-2AB (Horizontal)	Pin1	IPEX
	Pin2	GND
P3：PA-2AB (Vertical)	Pin1	IPEX
	Pin2	GND



WTLLS-C horizontal: connector definition



WTLLS-C vertical: connector definition

WTLLS-C PRO

Feedback-type liquid level sensor



After wiring, the LED flashes once quickly at power-on to confirm correct wiring.
When the liquid surface is detected, the LED flashes once quickly to indicate success.

Product Features

PRODUCT ADVANTAGES

- Input voltage: DC 5 V
- Ambient self-adaptation with auto-tare
- Compact size: 47 mm × 19 mm × 13.3 mm (incl. housing)
- Insulated mounting housing; ultra-thin, rugged and durable
- Power consumption: < 1 W
- Operating temperature: -40 to 85 °C (industrial grade)
- One level-trigger output and one bottom-contact (anti-crash) output
- Detection sensitivity down to 5 µL (medium-dependent);
  20 µL recommended for stable operation
- Interface: RS485/CAN (sensitivity, station ID, etc. configurable)
- Compatible with XH2.54-2PIN or IPEX input connectors

WTLLS-C PLUS

Feedback-type liquid level sensor



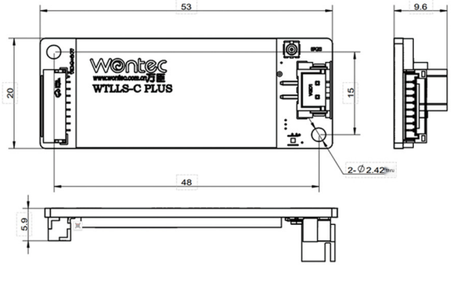

Product Features

PRODUCT ADVANTAGES

- Input voltage: DC 5–24 V
- Multiple needles detect in parallel without interference
- Compact size: 53 mm × 20 mm × 15 mm (incl. housing)
- Insulated mounting housing; ultra-thin, rugged and durable
- Power consumption: < 1 W
- Operating temperature: -40 to 85 °C (industrial grade)
- One liquid-entry signal and one liquid-exit signal
- Minimum detectable volume: 5 µL (medium-dependent);
  above 20 µL required for stable detection
- Interface: RS485/CAN (sensitivity, station ID, etc. configurable)
- Compatible with XH2.54-2PIN or IPEX capacitive input connectors

Integrated Pipetting Control Board

Technical Overview

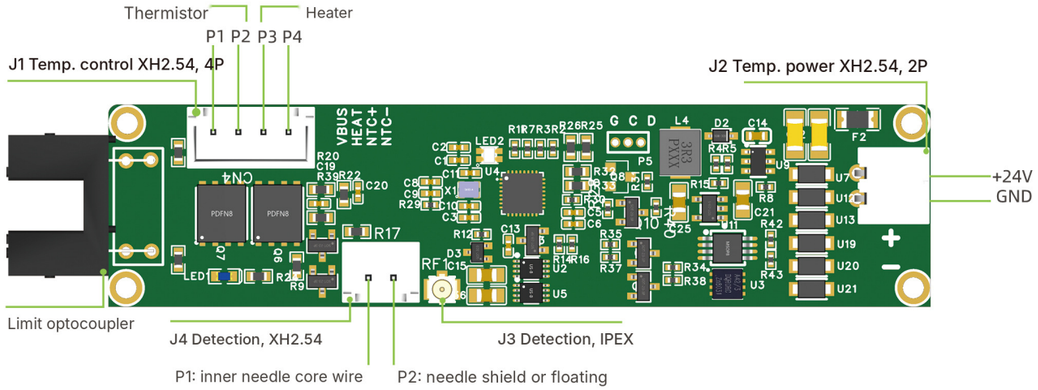

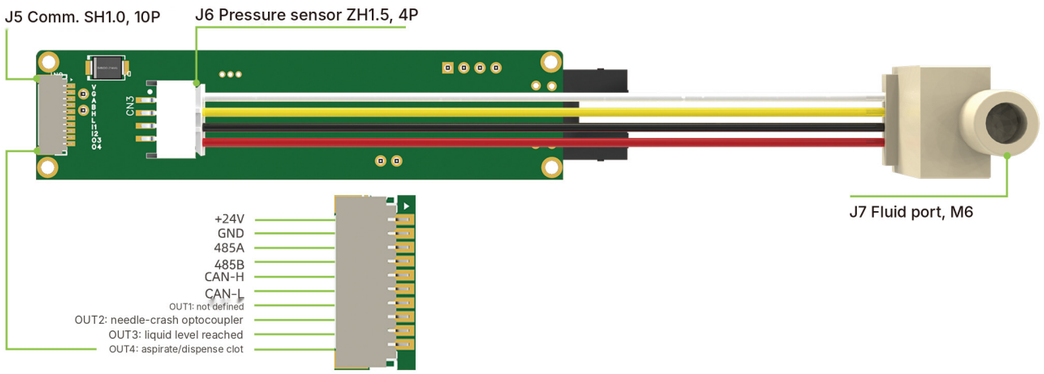

Product Features

PRODUCT ADVANTAGES

- Input voltage: DC 24 V
- High-precision liquid level detection
- Needle heating control, accuracy ±1 °C
- Fluid-path clot detection with adjustable aspirate/dispense thresholds
- Needle bottom-contact anti-crash protection
- Level sensing line supports both XH2.54-2PIN and IPEX input connectors
- Three I/O outputs: level trigger, needle bottom-contact and fluid-path clot signals
- Operating temperature: -40 to 85 °C (industrial grade)
- Dimensions: 91.9 mm × 20.2 mm × 13.1 mm
- Interface: RS485/CAN

Typical Wiring for Liquid Level Detection

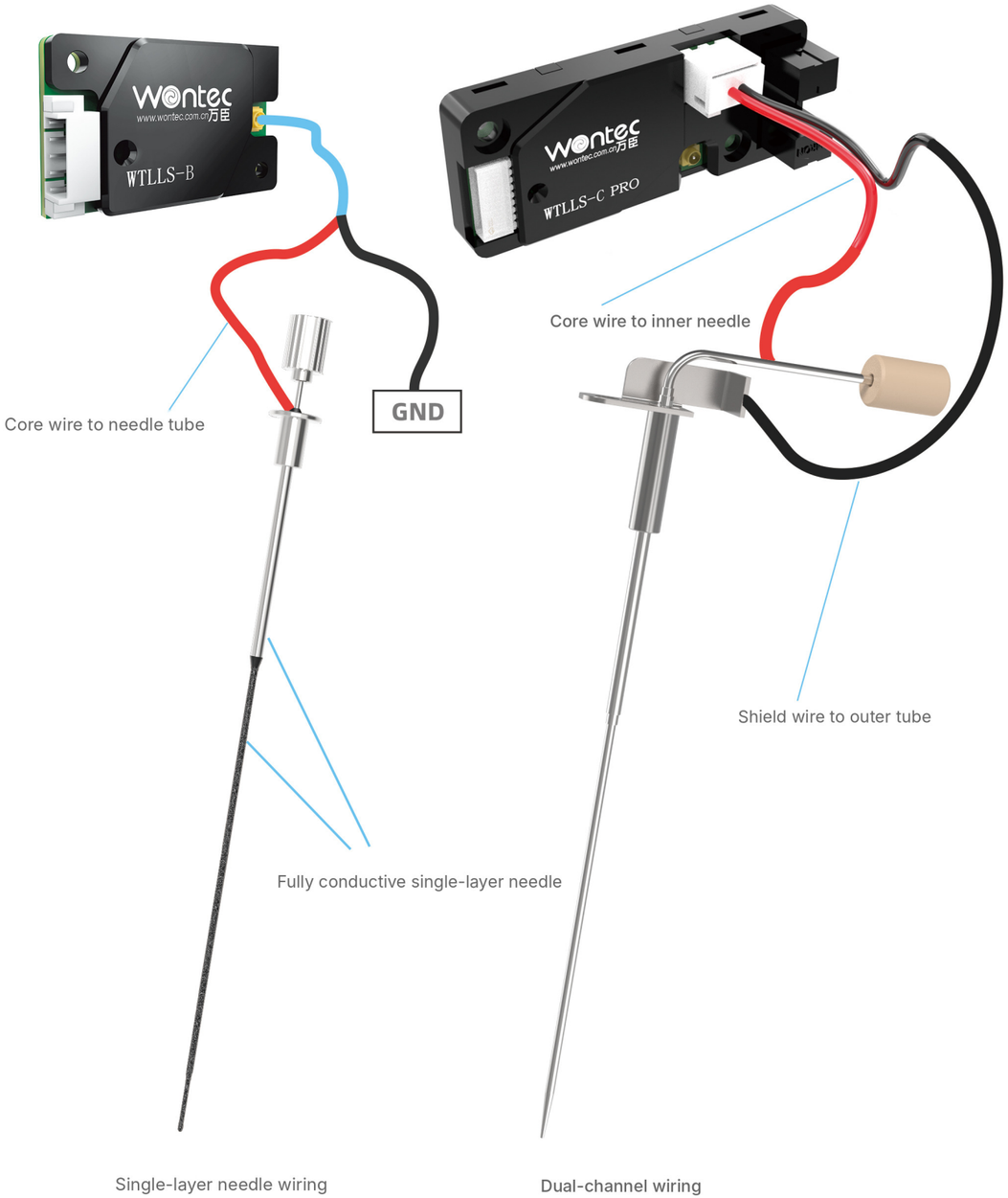

wontec
www.wontec.com.cn万臣

Smart Electric Grippers

WTEC20
- 20 standard (side-mounted driver)

WTEC20L
- 20 long-stroke (side-mounted driver)

WTEC20S
- 20 standard, self-locking (rear-mounted driver)

WTEC20LS
- 20 long-stroke, self-locking (rear-mounted driver)

WTEC20B
- 20 standard (rear-mounted driver)

WTEC20BL
- 20 long-stroke (rear-mounted driver)

WTEC20T
- 20 three-jaw, self-locking

WTEC28
- 28 standard

WTEC28L
- 28 long-stroke

WTEC28S
- 28 standard, self-locking

WTEC28LS
- 28 long-stroke, self-locking

WTEC28LP
- 28 extra-long-stroke, self-locking

WTEC42L
- 42 long-stroke, self-locking

WTEX28
- Rotary electric gripper

WTET28
- Rotary electric gripper



Smart Electric Gripper Features

PRODUCT ADVANTAGES

Supports RS485 or CAN communication control, plus simple and flexible I/O control.

Driver and encoder integrated in a closed-loop all-in-one design for a smaller footprint.

Integrated torque-feedback mode makes the gripper intelligent and able to run stand-alone.

Gripping force can be preset or changed online to meet diverse needs.

Detects whether an object has been gripped and feeds back a signal.

Maintains the preset gripping force after clamping (like a pneumatic gripper); outputs an alarm signal if the workpiece is dropped.

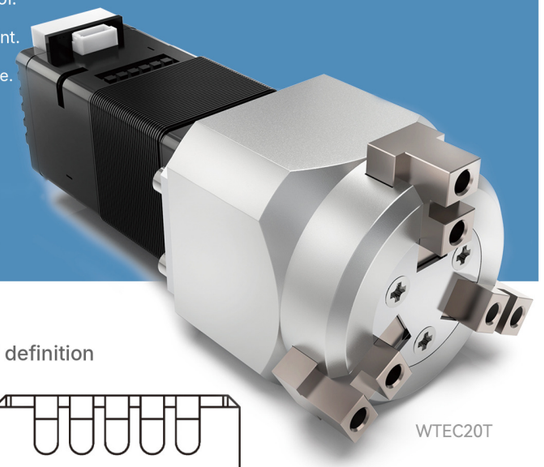

WTEC20T

20 series: side-mounted driver connector definition



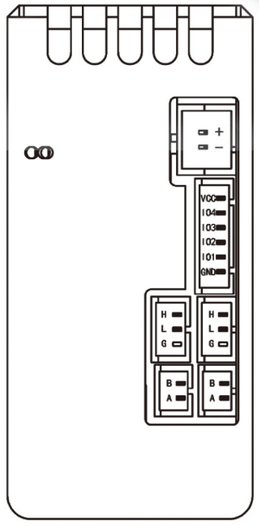

20 series: rear-mounted driver connector definition



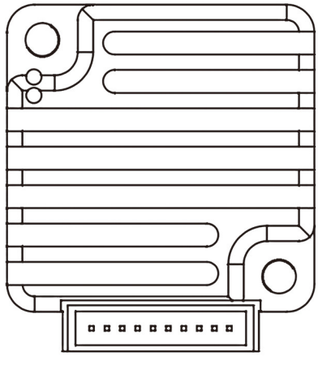

I04 I03 I02 I01 CANL CANH 485B 485A GND 24V

WTEC20 Series Smart Grippers (Parallel Fingers)

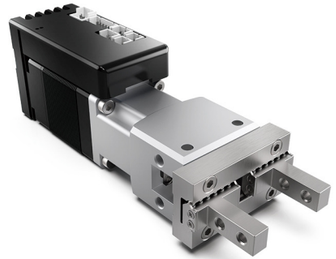

WTEC20

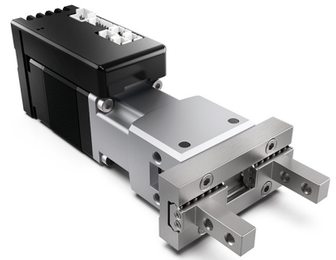

WTEC20L

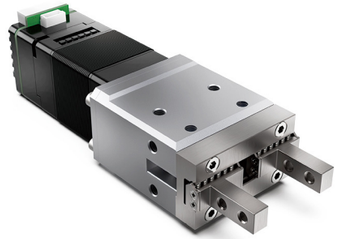

WTEC20S

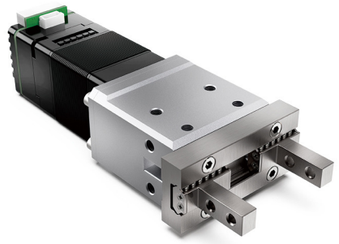

WTEC20LS

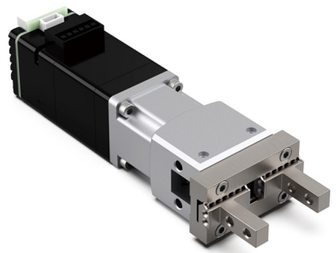

WTEC20B

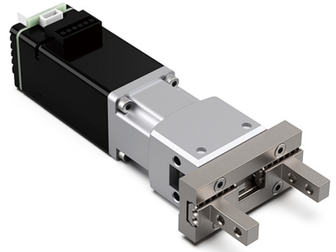

WTEC20BL

Specifications: 20 Series

Item	WTEC20	WTEC20L	WTEC20S	WTEC20LS	WTEC20B	WTEC20BL	WTEC20T
Total stroke	4mm	8mm	4mm	8mm	4mm	8mm	4mm
Gripping force	5-20N	5-20N	5-20N	5-20N	5-20N	5-50N	5-25N
Recommended payload	≤350N	≤300N	≤350N	≤300N	≤350N	≤300N	≤350N
Stroke adjustable	Yes	Yes	Yes	Yes	Yes	Yes	Yes
Force adjustable	Yes	Yes	Yes	Yes	Yes	Yes	Yes
Gripping mode	Torque mode	Torque mode	Torque mode	Torque mode	Torque mode	Torque mode	Torque mode
Maintenance-free life	4 million cycles						
Operating temperature	25℃-70℃						
Operating humidity	20%–85% RH, non-condensing						
Controller position	Body side, orientation selectable			Motor rear			
Control interface	RS485 / custom CAN / CANopen / I/O						
Weight	0.112kg	0.117kg	0.112kg	0.117kg	0.112kg	0.117kg	0.2kg
Single-stroke time	≤0.10s	≤0.15s	≤0.10s	≤0.15s	≤0.10s	≤0.15s	≤0.10s
Motor type	Stepper motor						
Rated voltage	24V	24V	24V	24V	24V	24V	24V
Peak current	1.6A	1.6A	1.6A	1.6A	1.0A	1.6A	1.6A
Standby current	≤50mA						
Note	Max. payload depends directly on finger design and is approx. 3× the recommended payload.						

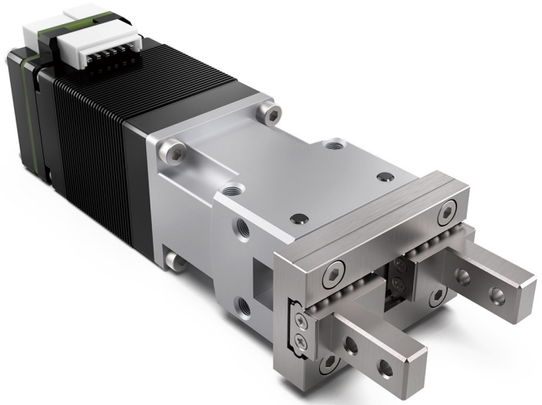

WTEC28

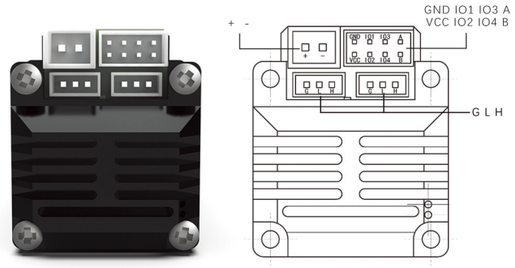

WTEC-28 series: driver connector definition

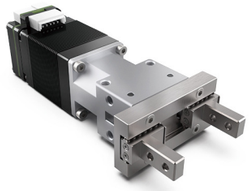

WTEC28L

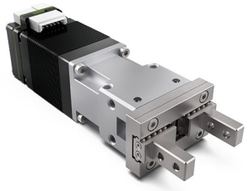

WTEC28S

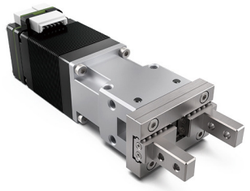

WTEC28LS

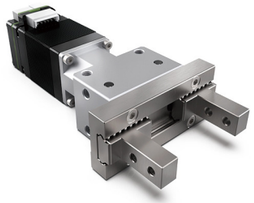

WTEC28LP

Specifications: 28 Series

Item	WTEC28	WTEC28L	WTEC28S	WTEC28LS	WTEC28LP
Total stroke	8mm	14mm	8mm	14mm	19mm
Gripping force	8-40N	8-40N	8-40N	8-40N	8-35N
Recommended payload	≤800g	≤800g	≤800g	≤800g	≤1000g
Stroke adjustable	Yes	Yes	Yes	Yes	Yes
Force adjustable	Yes	Yes	Yes	Yes	Yes
Gripping mode	Torque mode	Torque mode	Torque mode	Torque mode	Torque mode
Maintenance-free life	5 million cycles	4 million cycles	5 million cycles	4 million cycles	4 million cycles
Operating temperature	25℃-70℃				
Operating humidity	20%–85% RH, non-condensing				
Controller position	Motor rear				
Control interface	RS485 / custom CAN / CANopen / I/O				
Weight	0.27kg	0.275kg	0.25kg	0.255kg	0.40kg
Single-stroke time	≤0.15s	≤0.20s	≤0.15s	≤0.20s	≤0.40s
Motor type	Stepper motor				
Rated voltage	24V	24V	24V	24V	24V
Peak current	1.6A	1.6A	1.6A	1.6A	1.6A
Standby current	≤100mA				
Note	Max. payload depends directly on finger design and is approx. 3× the recommended payload.				

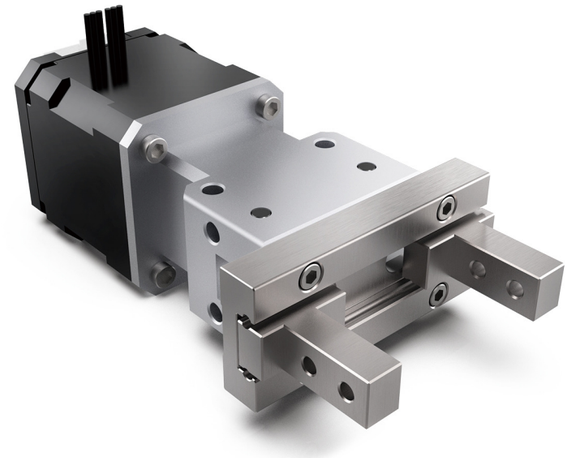

WTEC42L

WTEC-42 series: driver connector definition

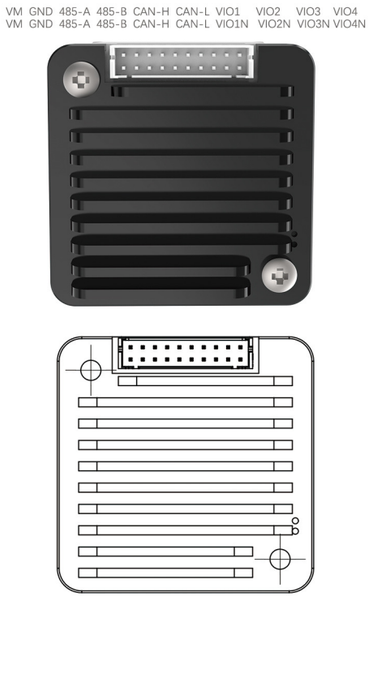

Specifications: 42 Series

Item	WTEC42L
Total stroke	19mm
Gripping force	320N
Recommended payload	≤3kg
Stroke adjustable	Yes
Force adjustable	Yes
Gripping mode	Torque mode
Maintenance-free life	4 million cycles
Operating temperature	25℃-70℃
Operating humidity	20%–85% RH, non-condensing
Controller position	Motor rear
Control interface	RS485 / custom CAN / CANopen / I/O
Weight	0.53kg
Single-stroke time	0.4s
Motor type	Stepper motor
Rated voltage	24V
Peak current	3A
Standby current	≤100mA
Note	Max. payload depends directly on finger design and is approx. 3× the recommended payload.

Smart Rotary Gripper Features

PRODUCT ADVANTAGES

- Compact, lightweight and tightly integrated.
- Unlimited rotation with precise angular positioning.
- Torque-mode gripping.
- Workpiece presence detection throughout the stroke.
- Torque-mode capping and decapping.
- Monitors whether the cap is fully tightened or loosened.
- RS-485 communication control.
- Concise command set; host PC software included.
- Ultra-quiet with long service life.
- Pairs with a Z-axis module for more automation.



WTEX28

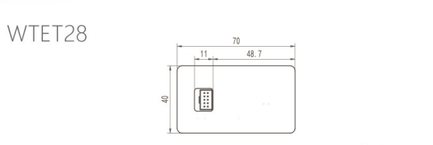

WTET28

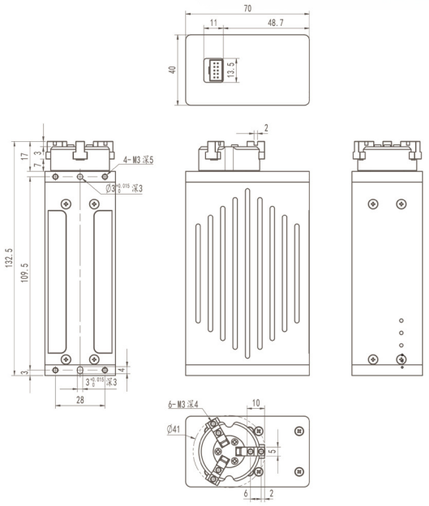

WTEX28

WTET28

Smart rotary gripper: driver connector definition

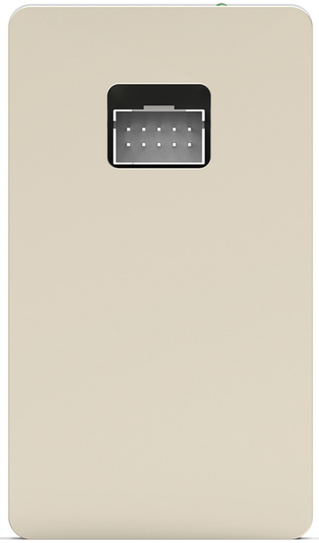

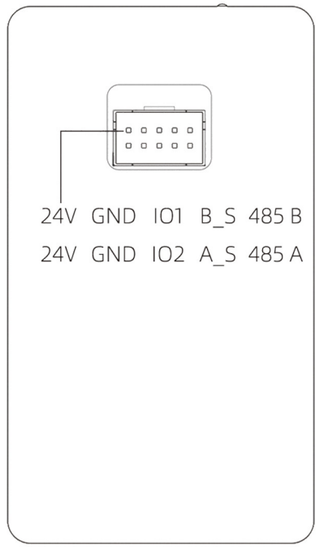

Specifications: Rotary Grippers

Item	WTEX28	WTET28
Power supply	DC 24 V, peak current 2000 mA	
Connector	PHB2.0_2*5AS	
Protocol	RS-485 (ASCII and MODBUS RTU compatible)	
Environment	15–35 °C, 20%–85% RH non-condensing	
Working principle	Stepper-driven lead screw actuates the jaws and spindle rotation; encoder closed-loop servo control	
Total jaw stroke	9mm	14mm
Max. gripping force	100N	100N
Gripping speed	15mm/s	15mm/s
Max. rotation speed	360	360
Max. rotation torque	1.5NM	1.5NM
Weight	0.75kg	0.75kg
Dimensions	L 70 × W 40 × H 133 mm	L 70 × W 40 × H 157 mm

Integrated Smart Stepper Motors

PRODUCT ADVANTAGES



Supports RS485, Modbus, CAN, CANopen and I/O control.

Driver and encoder are mounted at the motor rear for closed-loop control and a smaller footprint.

Works in torque or position mode; no pulse input needed, controlled by communication commands.



Torque-based homing mode lets you omit the home sensor on the motion module.

The driver connects directly to level sensors and special-purpose home sensors.

Reduced-wiring mode: only 4 wires to the host PC, two for DC 24 V power and two for communication.

Supports 254 station IDs (00 to 253; hexadecimal 0x00 to 0xFD).

Parameters (microstepping, current, speed, accel/decel, displacement, torque, etc.)

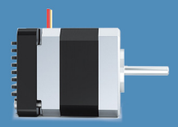

can be changed at any time from the host PC.

Motions are executed with simple control commands.

Positioning is done with absolute or relative move commands.

Precision die-cast aluminum alloy housing: high strength, low temperature rise, corrosion-resistant.

Fits 20/28/42/57 mm frame two-phase 4-wire stepper motors.

Driver includes over-temperature and torque overload protection.

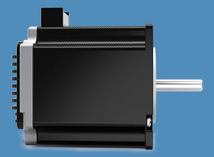

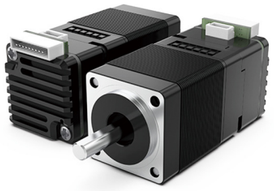

WTAIS20



WTAIS28

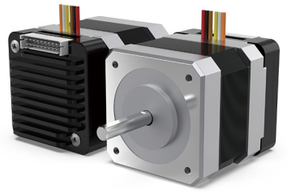

WTAIS42

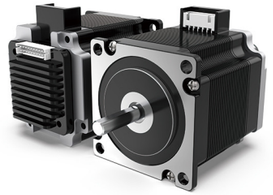

WTAIS57

Specifications

Item	Value	Item	Value
Supply voltage	DC24V	Cooling	Natural convection
Output current	1.5A-5A	Ambient temperature	-40℃~85℃
Microstep resolution	10000	Ambient humidity	< 80% RH, no condensation or frost
Insulation resistance	≥100MΩ	Vibration	3G MAX
Dielectric strength	0.5KV，1min	Environment	Free of dust, oil mist and corrosive gases

Smart Stepper Motor Connector Definition



WTAIS20

Port	Pin	Name	Description
Port P1	Pin1	POWER	GND
	Pin2	GND	Digital GND
	Pin3	RS485	485A
	Pin4		485B
	Pin5	CAN	H
	Pin6		L
	Pin7	I/O	IO 1
	Pin8		IO 2
	Pin9		IO 3
	Pin10		IO 4



WTAIS28

Port	Pin	Name	Description
Port P1	Pin1	POWER	+24V
	Pin2		GND
Port P2	Pin1	GND	Digital GND
	Pin2	VCC	+5 V out, 20 mA
	Pin3	I/O	IO1
	Pin4		IO2
	Pin5		IO3
	Pin6		IO4
	Pin7	RS485	485A
	Pin8		485B
Port P3	Pin1	CAN	G
	Pin2		L
	Pin3		H

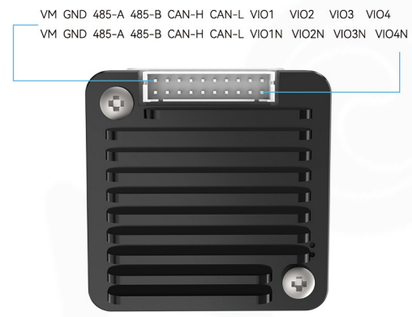

WTAIS42

Port	Pin	Name	Description
Power	Pin1	VM	+24V
	Pin2		
	Pin3	GND	Digital GND
	Pin4		
Comm.	Pin5	RS485	485A
	Pin6		
	Pin7		485B
	Pin8		
	Pin9	CAN	H
	Pin10		
	Pin11		L
	Pin12		
I/O	Pin13	IN	VIO1
	Pin14		VIO1N
	Pin15	OUT	VIO2
	Pin16		VIO2N
	Pin17	IN	VIO3
	Pin18		VIO3N
	Pin19	OUT	VIO4
	Pin20		VIO4N

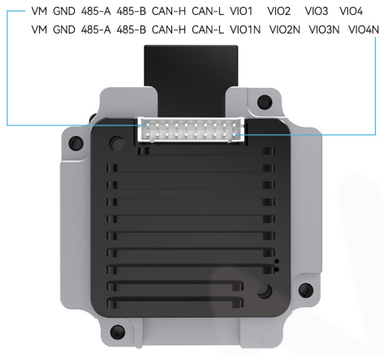

WTAIS57

Port	Pin	Name	Description
Power	Pin1	VM	+12V~36V
	Pin2		
	Pin3	GND	Digital GND
	Pin4		
Comm.	Pin5	RS485	485A
	Pin6		
	Pin7		485B
	Pin8		
	Pin9	CAN	H
	Pin10		
	Pin11		L
	Pin12		
I/O	Pin13	IN	VIO1
	Pin14		VIO1N
	Pin15	OUT	VIO2
	Pin16		VIO2N
	Pin17	IN	VIO3
	Pin18		VIO3N
	Pin19	OUT	VIO4
	Pin20		VIO4N

Plunger Pumps with Integrated Driver

PRODUCT ADVANTAGES

Compact, high-performance, long-life and maintenance-free;

Easy to use; compatible with RS485 and CAN communication protocols;

Smaller footprint and lower noise, ideal for integration into miniature automated instruments;

Six-segment aspirate/dispense calibration for liquids of different viscosity; stores up to 8 sets of compensation data;

Dispense cut-off function reduces liquid hang-up.

Driver board adds solenoid valve control I/O

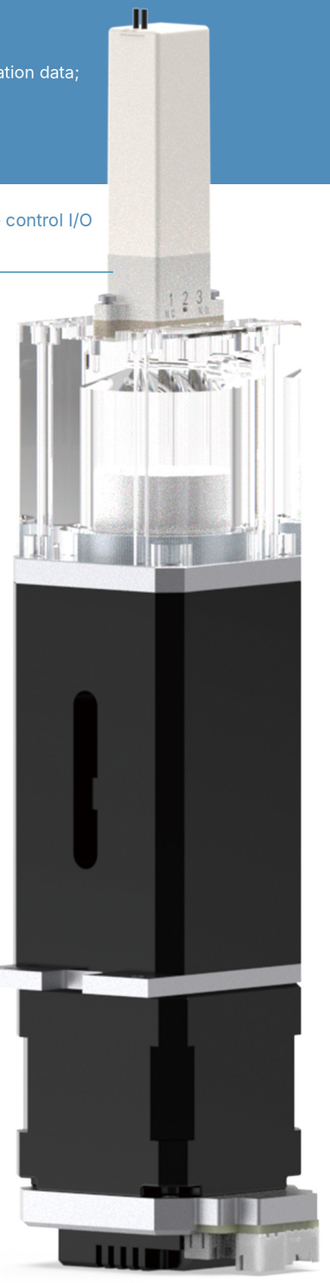

Driver board for ESM50UL/250UL/1000UL/5000UL/10000UL plunger pumps:



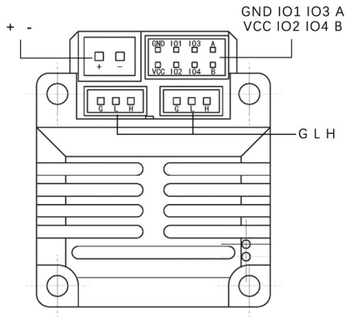

28 driver connector definition

Driver board for ESM50UL/250UL/1000UL/5000UL/10000UL PRO plunger pumps:

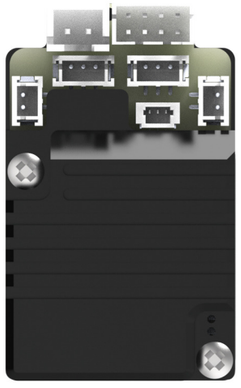

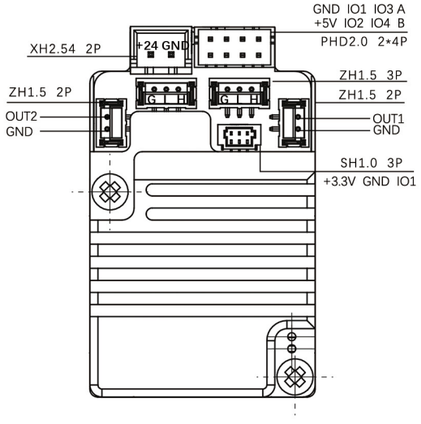

Notes:

1. 24 V is the input supply.
2. 5 V and 3.3 V are output supplies.
3. OUT1 and OUT2 are command-controlled and can output 24 V or 0 V.

Plunger Pump Connector Definition



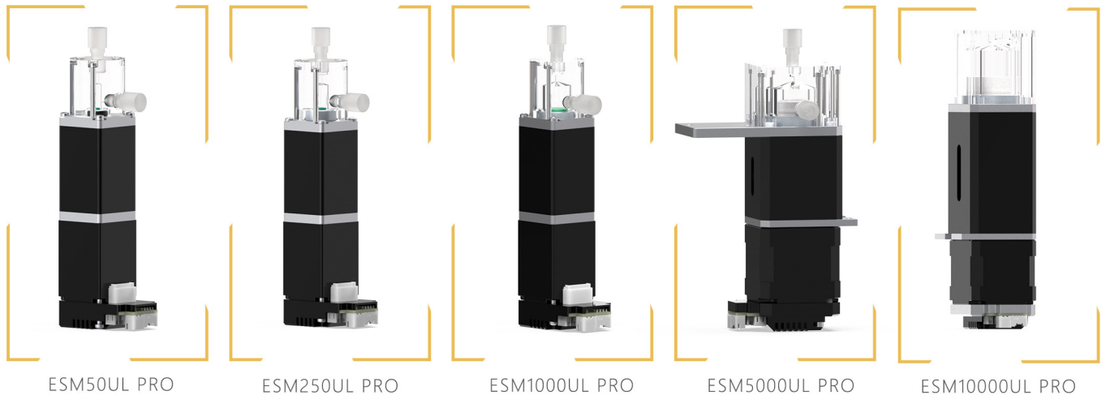

Specifications

Note: base and PRO versions share the same specifications; only the driver board model differs.

Pump model	ESM50UL	ESM250UL	ESM1000UL	ESM5000UL	ESM10000UL
Max. volume (µL)	50	250	1000	5000	10000
Plunger diameter (mm)	2.52	5.64	11.29	23.5	23.5
Volume per step (nL/step)	0.5	2.5	10	50	50
Stroke (mm)	10	10	10	11.5	26.9
Max. motor speed (r/s)	4000				
Microsteps (step/r)	10000				
Lead (mm)	1				
Travel per step (mm/step)	0.0001 (calculated from microstepping)				
Repeatability (CV)	< 1.2% (measured at ≥ 2% of full-scale volume) < 1.0% (measured at ≥ 10% of full-scale volume) < 0.5% (measured at 100% of full-scale volume)				
Life (×10,000 cycles)	500				
Port type	1/4-28UNF				
Mounting	4-M3 (screw engagement < 3.5 mm)				
Dimensions (mm)	135x33x28	136x42x86	135x33x28	136x42x86	178x42x86

Involute Spline Gears

WT10403

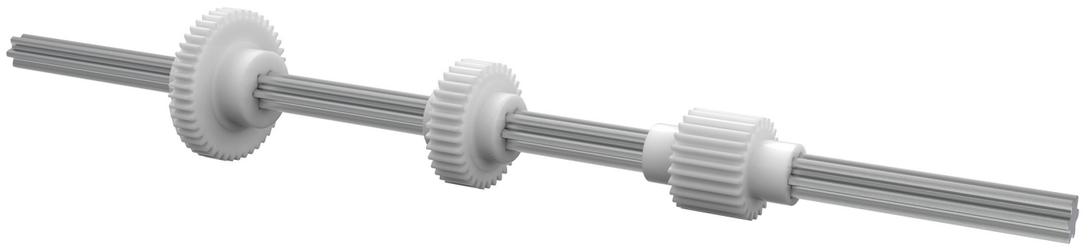

Product Features

PRODUCT ADVANTAGES

This product combines a spline drive shaft with a gear pair and is widely used on the Y-axis of sampling arms in medical devices. Torque is transmitted to the actuator more precisely through the gears, which slide freely and smoothly along the shaft.

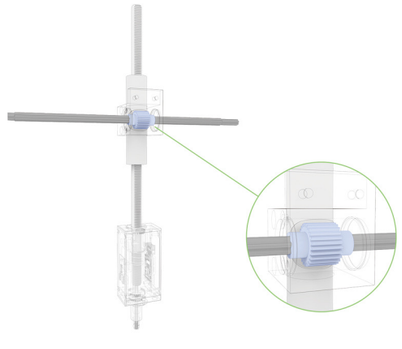

Specifications

Item		Value
Length L (mm)		100 (customizable)
D（mm）		5.84
d（mm）		3.71
Gear 1	Module	0.5
	No. of teeth	45
	Pitch diameter	22.5
	Pressure angle	20°
	Material	POM
	Color	White
Gear 2	Module	0.5
	No. of teeth	34
	Pitch diameter	17
	Pressure angle	20°
	Material	POM
	Color	White
Gear 3	Module	0.5
	No. of teeth	25
	Pitch diameter	12.5
	Pressure angle	20°
	Material	POM
	Color	White

Rack Ball Splines

Stainless steel, chrome-plated surface



Precision Rack Splines

Bearing steel, cold-electroplated surface

Precise, backlash-free, smooth and reliable



Product Features

PRODUCT ADVANTAGES

Widely used on the Z-axis of all kinds of sampling arms. Both spline anti-rotation and guidance use rolling friction, giving a compact, agile, high-precision and long-life design. The hollow rack shaft lets tubing and cables pass through, keeping the Z-axis compact and tidy. Length and mounting dimensions can be customized on request.

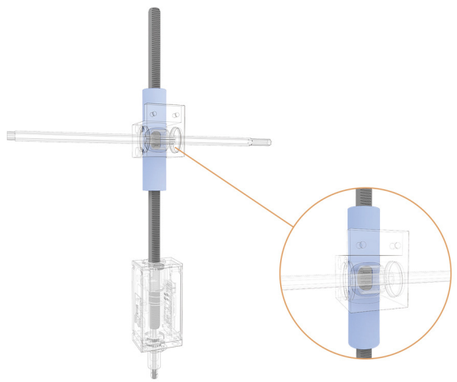

Specifications

Item	Value
Length L (mm)	250
Width W (mm)	7.8
Outer diameter S1 (mm)	8
Inner diameter S2 (mm)	5
Nut dimension M (mm)	16
Nut dimension N (mm)	69
Nut dimension B (mm)	1.75
Rack module m	0.5
Basic torque rating Cr (kgf·m)	0.44
Rated life (km)	> 3000
Mass (kg)	0.12

Sliding Rack Assembly

WT13602



Product Features

PRODUCT ADVANTAGES

Widely used on the Z-axis of single- and multi-channel sampling arms.

High-grade aluminum with special hardening ensures smooth running and long service life.

Internal spline anti-rotation guidance and rack-and-pinion drive make it compact, agile, precise and long-lasting.

The hollow rack shaft lets tubing and cables pass through, keeping the Z-axis compact and tidy.

Length and mounting dimensions can be customized on request.

Specifications

Item	Value
Length L (mm)	348 (customizable)
Rack module m	0.5
Rack end mounting dimensions	Customizable
Guide slot mounting dimensions	Customizable
Material	AL7075
Surface treatment	Hard anodized
Overall rack straightness	< 0.1 mm
Basic torque rating Cr (kgf·m)	0.3
Rated life (km)	> 1000
Mass (kg)	0.1

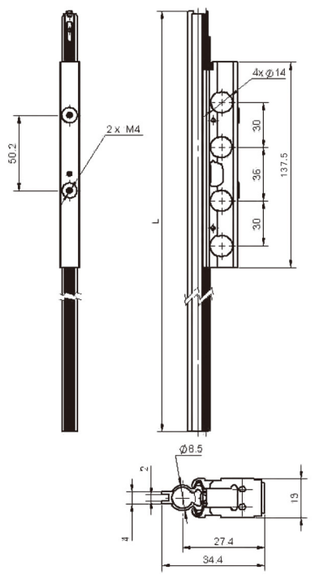

Rotary Ball Splines

WTX13



Product Features

PRODUCT ADVANTAGES

A rotary ball spline has a dedicated bearing housing fitted on the outer diameter of the spline nut, so the nut itself can rotate. By rotating or stopping the nut, a single shaft delivers both rotary and linear motion. The hollow shaft lets tubing and cables pass through, keeping the Z-axis compact and tidy. Length and mounting dimensions can be customized on request.

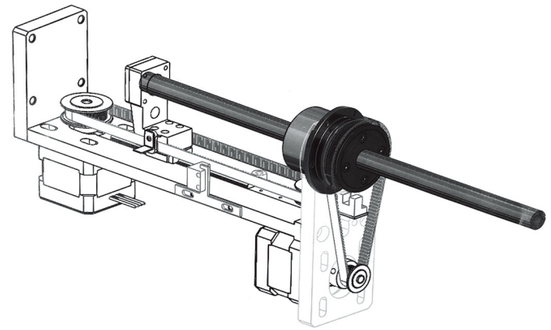

Specifications

Item	Value
Length L (mm)	300 (customizable)
Spline shaft diameter	Ø13
Shaft end mounting dimensions	Customizable
Material	GCr15
Surface treatment	Low-temp. black chrome (Raydent)
Pulley type	MXL60 (customizable)
Overall rack straightness	< 0.1 mm
Basic torque rating Cr (kgf·m)	1.51
Basic load rating C (kgf)	222
Rated life (km)	> 3000
Mass (kg)	0.38

Ball Screws



Specifications

l: lead Da: ball dia. n: ball circuits k: rigidity (kgf/μm) Ca: dynamic load rating (kgf) Coa: static load rating (kgf)

Model – circuits	Reference data for ball screw and nut															
	d	l	Da	D	A	B	L	W	H	X	Y	Z	Q	n	Ca	Coa	k
SFKR00601	6	1	0.8	12	24	3.5	15	18	16	3.4				1x3	111	224	9
SFKR00801	8	1	0.8	14	27	4	16	21	18	3.4				1x4	161	403	14
SFKR00802		2	1.2	14	27	4	16	21	18	3.4				1x3	222	458	13
SFKR0082.5		2.5	1.2	16	29	4	26	23	20	3.4				1x3	221	457	13
SFKR01002	10	2	1.2	18	35	5	28	27	22	4.5				1X3	243	569	15
SFS01205-2.8	12	5	2.5	24	40	10	31	32	30	4.5				2.8*1	536	794	12.5
SFS01210-2.8		10	2.5	24	40	10	48.5	32	30	4.5				2.8*1	422	711	12
SFSR01610-2.8	15	10	2.778	28	48	10	47	38	40	5.5			M6*1P	2.8*1	592	1131	14
SFSR01620-1.8		20	2.778	28	48	10	57	38	40	5.5			M6*1P	1.8*1	415	768	9
SFUR01605-4	16	5	3.175	28	48	10	50	38	40	5.5			M6	4	888.1	1525	22.1
SFUR01610-3		10	3.175	28	48	10	57	38	40	5.5			M6	3	716.4	1232	16.6

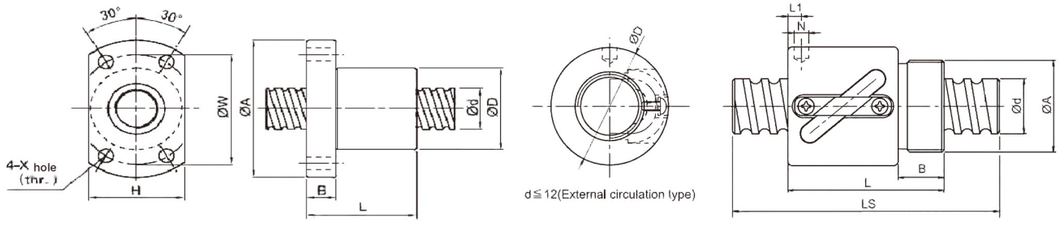

Specifications

l: lead Da: ball dia. n: ball circuits k: rigidity (kgf/μm) Ca: dynamic load rating (kgf) Coa: static load rating (kgf)

Model – circuits	Reference data for ball screw and nut														
	d	l	Da	D	A	B	L	L1	N	L2	Q	n	Ca	Coa	k
BSHR0082.5-2.5	8	2.5	1.2	17.5	M15x1p	7.5	23.5	10	3			2.5x1	189	381	11
BSHR01002-3.5	10	2	1.2	19.5	M17x1p	7.5	22	3	3.2			3.5x1	277	664	17
BSHR01004-2.5	10	4	2	25	M20x1p	10	34	3	3			2.5x1	400	754	14

Mini Linear Guides



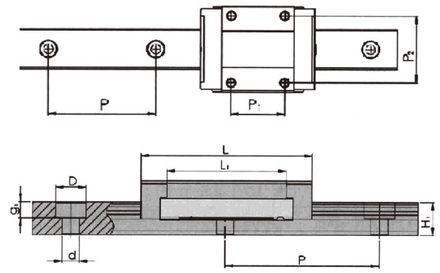

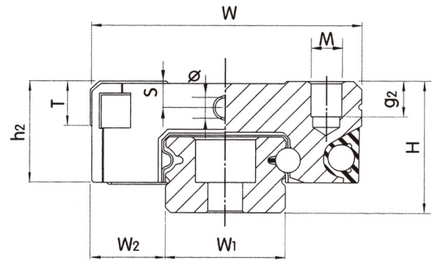

Specifications

CPC model	WON model	Assembly		Rail dimensions (mm)				Block dimensions (mm)					
		H	W2	W1	H1	P	Dxdxg1	W	L	L1	P1	P2	Φ
MR15ML	M15L	16	8.5	15	9.5	40	6x3.5x4.5	32	60	44	25	25	1.8
MR15MN	M15N	16	8.5	15	9.5	40	6x3.5x4.5	32	43	27	20	25	1.8
MR12ML	M12L	13	7.5	12	7.5	25	6x3.5x4.5	27	47.6	34	20	20	1.3
MR12MN	M12N	13	7.5	12	7.5	25	6x3.5x4.5	27	35.4	22	15	20	1.3
MR9ML	M9L	10	5.5	9	5.5	20	6x3.5x3.5	20	40.9	30.8	16	15	1.3
MR9MN	M9N	10	5.5	9	5.5	20	6x3.5x3.5	20	30.6	20.5	10	15	1.3
MR7ML	M7L	8	5	7	4.7	15	4.2x2.4x2.3	17	31.2	21.8	13	12	1.1
MR7MN	M7N	8	5	7	4.7	15	4.2x2.4x2.3	17	23.7	14.3	8	12	1.1
MR5ML	M5N	6	3.5	5	3.5	15	3.5x2.4x1	12	19.6	13.5	7	-	0.7
MR5MN	M5C	6	3.5	5	3.5	15	3.5x2.4x1	12	16	10	-	8	0.7
MR3ML	-	4	2.5	3	2.6	10	M1.6	8	16	11	5.5	-	0.3
MR3MN	-	4	2.5	3	2.6	10	M1.6	8	11.7	6.7	3.5	-	0.3

wontec
www.wontec.com.cn万臣

Precision Ball Splines

Cylindrical type | Flange type

Scan the QR code to view
and download documentation

WSP 6

Hollow shaft, ID 3 mm

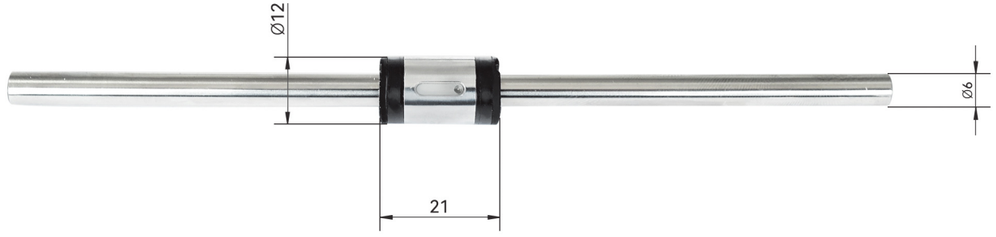

WSP 8T

Hollow shaft, ID 4 mm

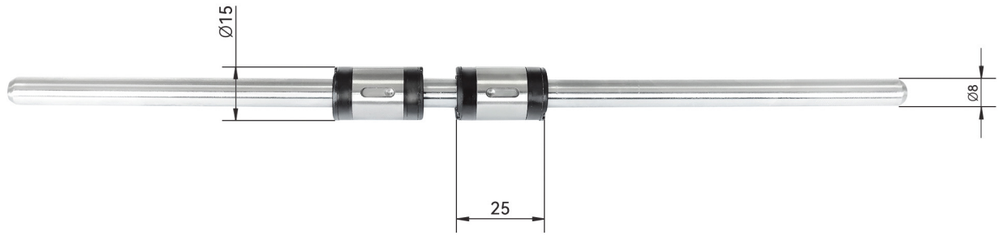

TLT 008

Hollow shaft, ID 5 mm
Spline with rack (m = 0.5)

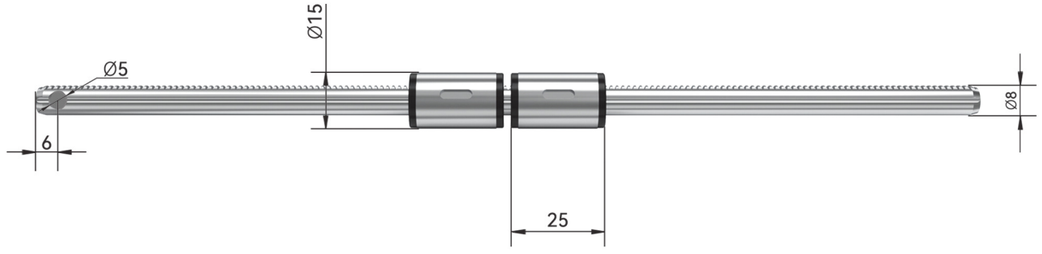

SLT 10

Hollow shaft, ID 5 mm

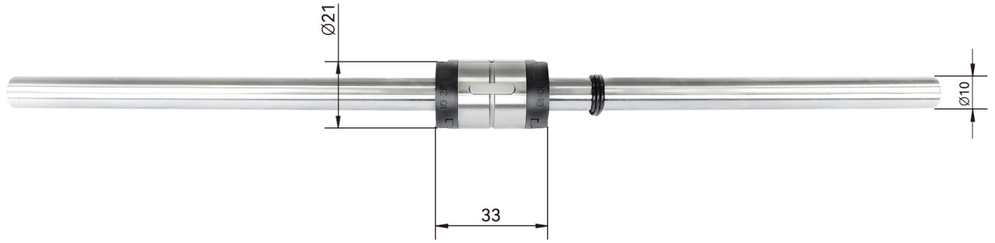

SLT 10

Hollow shaft, ID 5 mm
Spline with rack (m = 0.5)

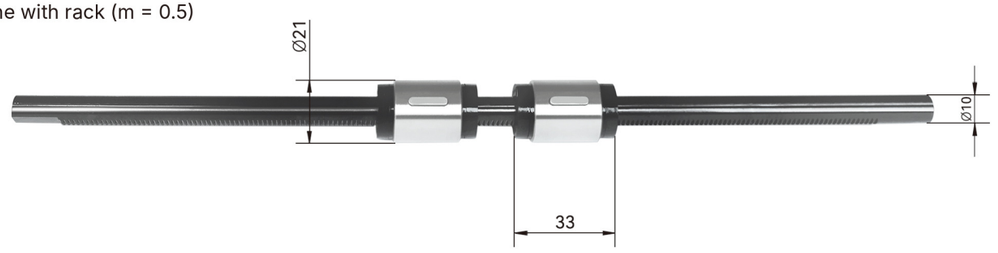

WSP 12

Hollow shaft, ID 6.5 mm (can be bored up to 8 mm)

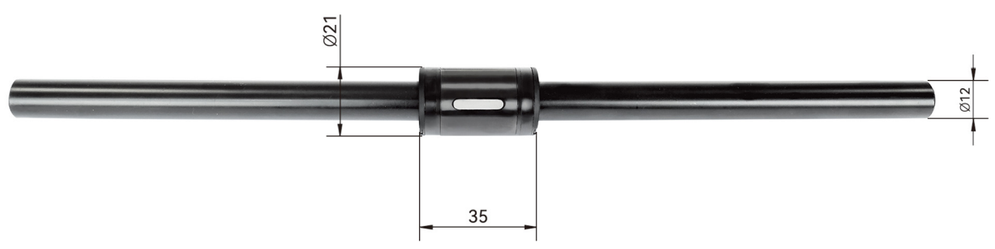

WSP 12

Hollow shaft, ID 6.5 mm (can be bored up to 8 mm)

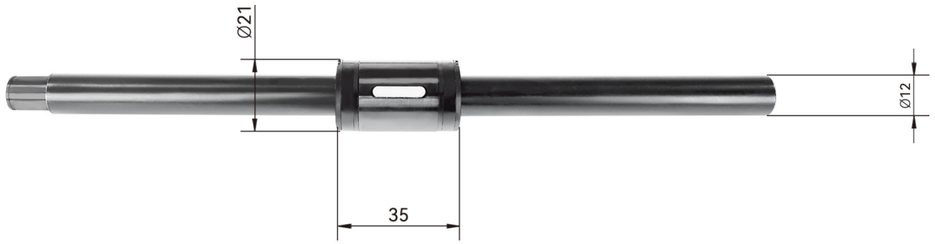

WSPT 12

Hollow shaft, ID 6.5 mm (can be bored up to 8 mm)

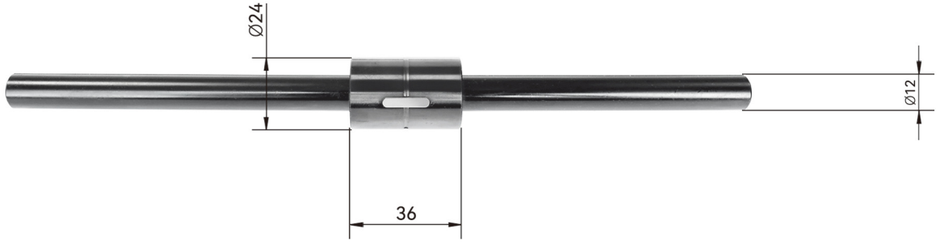

WLS 16

Hollow shaft, ID 12 mm

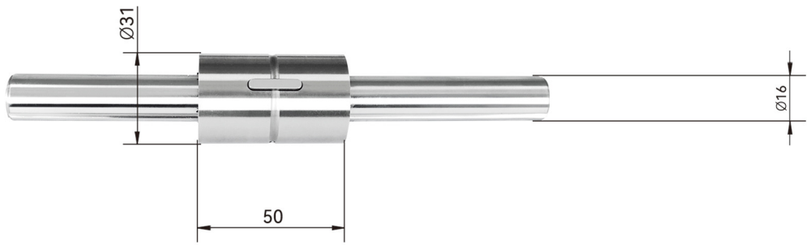

SLF 13

Hollow shaft, ID 7 mm

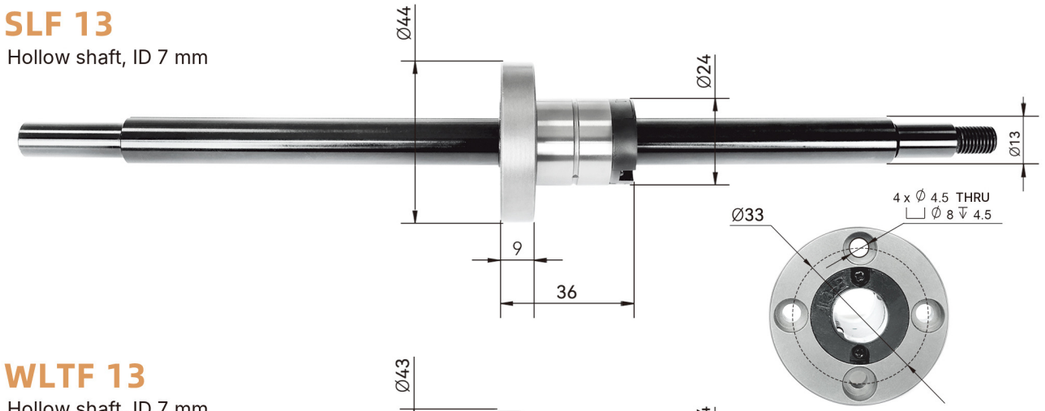

WLTF 13

Hollow shaft, ID 7 mm

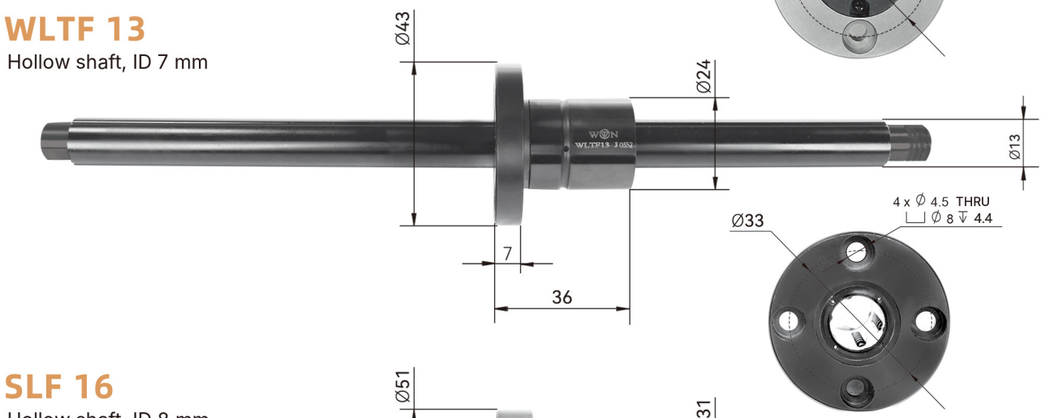

SLF 16

Hollow shaft, ID 8 mm

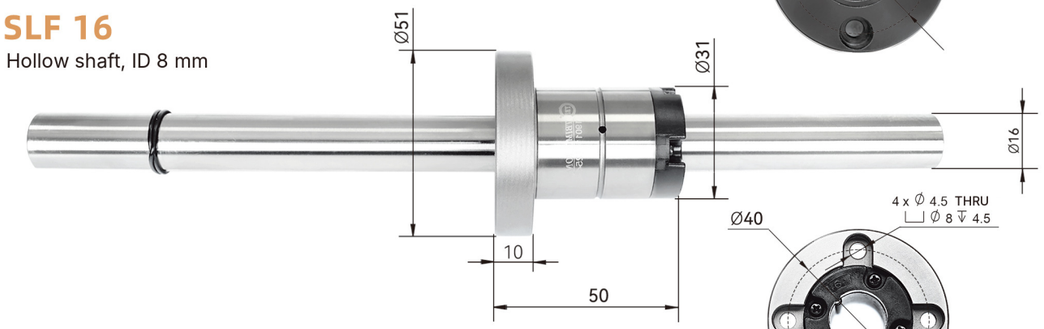

WLSF 16

Hollow shaft, ID 12 mm

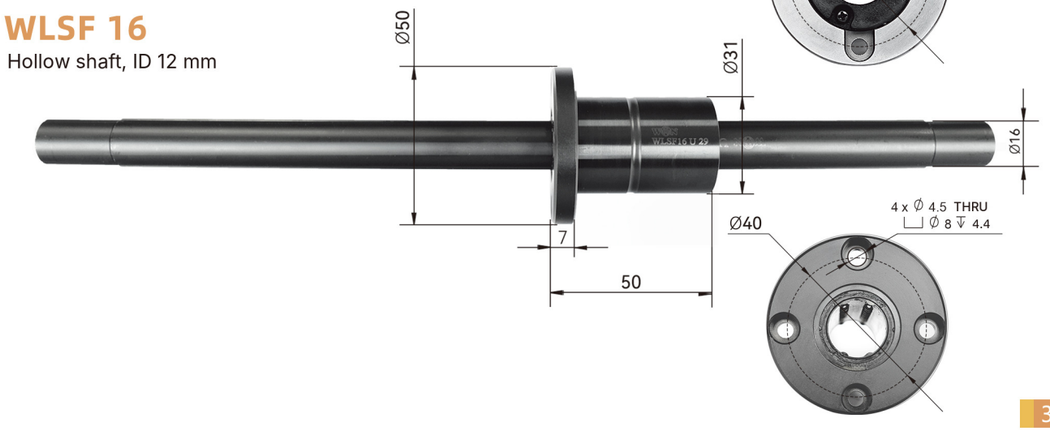

Dimensions

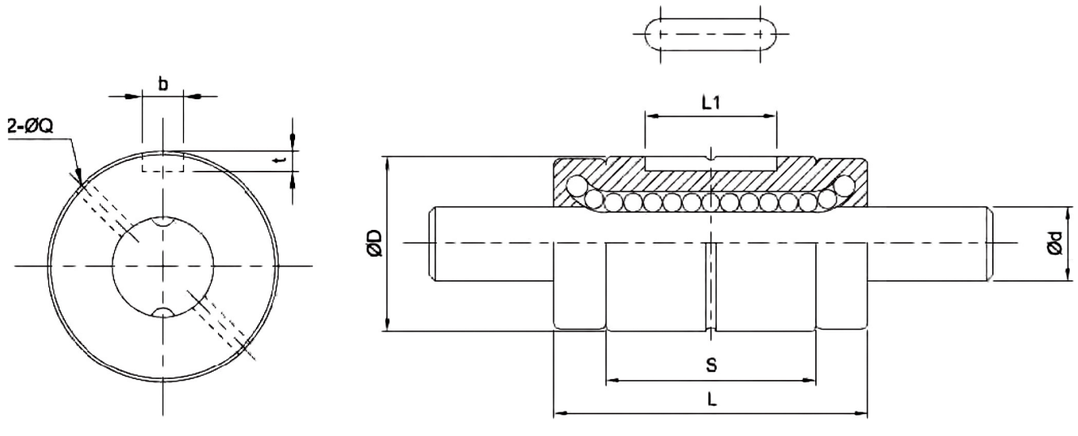

Specifications

Model	Shaft	Ball rows	Spline nut				Keyway / shaft			Load rating		Torque rating		Static moment		Mass	
	d		D	L	L1	Oil hole	b	t	d	C	CO	CT	COT	MA1	MA2	Nut	Shaft
	h7					Q	H8		h7	kgf	kgf	kgf.m	kgf.m	kgf.m	kgf.m	g	kg/m
WSPL5	5	2	10	26	6		2	1.2	5	90	120	0.27	0.36	0.32	2	7.9	14.9
WSP6	6	2	12	21	8		2	1.2	6	73	87	0.25	0.31	0.18	1.2	8.9	19
SLT006	6	2	14	25	10.5	1	2.5	1.2	6	137	225	0.46	0.76	0.39	3.48	14	0.22
WSPT6	6	2	14	25	10.5		2.5	1.2	6	120	220	0.1	0.2	0.5	3.63	8.9	19
SLT008	8	2	16	27	10.5	1.5	2.5	1.2	8	137	225	0.60	0.99	0.39	3.82	16	0.39
WSPT8	8	2	16	25	10.5		2.5	1.2	8	150	260	0.2	0.3	0.6	4.5	15.9	39
SLT010	10	2	21	33	13	1.5	3	1.5	10	285	397	1.62	2.25	0.95	8.53	37	0.60
WSPT10	10	2	21	33	13		3	1.5	10	290	500	0.4	0.8	1.6	9.8	31.5	60.5
SLT013	13	4	24	36	15	1.5	3	1.5	13	396	540	2.89	3.94	1.50	12.46	52	1.03
WSPT12	12	2	24	36	15		3	1.5	12	360	590	0.6	1.1	2	13.8	44	87.5
WSP12	12	2	21	35	15		3	1.8	12	220	270	1.5	1.9	1.1	6	44	87.5
SLT016	16	4	31	50	17.5	2	3.5	2	16	545	849	4.77	7.43	3.71	26.09	130	1.56
WLS16	16	4	31	50	17.5	2	4	2	16	624	1142	6.11	11.2	4.96		150	150
WSPT15	13.6	4	31	50	17.5		3.5	2	13.6	720	1290	3.2	3.5	6.8	39.3	59.5	111
SLT020	20	2	35	56	29	2	4	2.5	20	724	1109	7.9	12.09	5.53	38	188	2.44
WSPT20	18.2	4	35	63	29		4	2.5	18.2	1040	1819	5.8	5.7	11.7	90	130	202

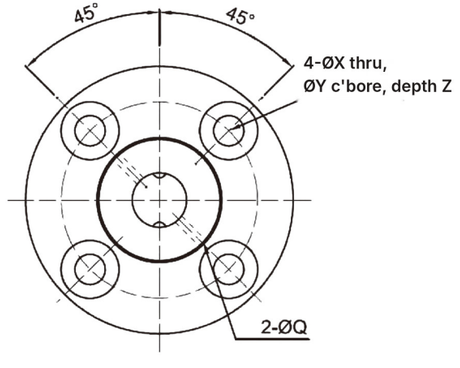

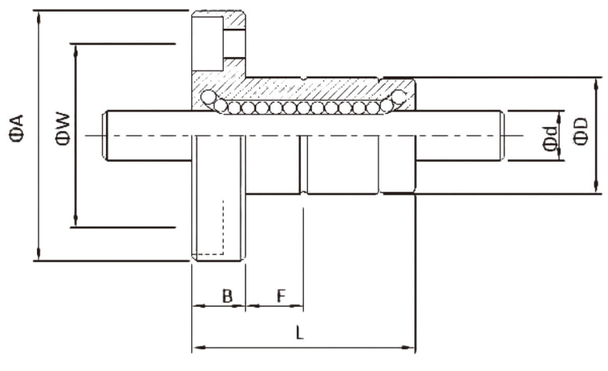

Model	Shaft	Ball rows	Spline nut									Load rating		Torque rating		Static moment		Mass	
	d		D	L	A	B	F	Oil hole Q	W	Mounting hole X	Mounting hole Y	Mounting hole Z	C	CO	CT	COT	MA1	MA2	Nut	Shaft
	h7												kgf	kgf	kgf.m	kgf.m	kgf.m	kgf.m	g	kg/m
SLF006	6	2	14	25	30	6	7.5	1	22	3.4	6.5	3.5	137	225	0.46	0.76	0.39	3.48	36.7	0.22
WSPTF6	6	2	14	25	30	5		1	22	3.4	6.5	3.3	120	220	0.1	0.2	0.5	3.6	37.2	19
SLF008	8	2	16	27	32	8	7.5	1.5	24	3.4	6.5	4.5	137	225	0.6	0.99	0.39	3.82	47	0.39
WSPTF8	8	2	16	25	32	5		1.5	24	3.4	6.5	3.3	150	260	0.2	0.3	0.6	4.4	39.5	39
SLF010	10	2	21	33	42	9	11	1.5	32	4.5	8	4	285	397	1.62	2.25	0.95	8.53	100	0.60
WSPTF10	10	2	21	33	42	6			32	4.5	8	4.4	290	500	0.4	0.8	1.6	9.8	64.2	60.5
SLF013	13	2	24	36	44	9	11	1.5	33	4.5	8	4.5	396	540	2.89	3.94	1.50	12.46	117	1.03
WSPTF12	12	2	24	36	44	7			33	4.5	8	4.4	360	590	0.6	1.1	2	13.7	124.7	87.5
SLF016	16	4	31	50	51	10	18	2	40	4.5	8	6	545	849	4.77	7.43	3.71	26.09	226	1.56
WLSF16	16	4	31	50	50	7	18	2	40	4.5	8	4.4	624	1142	6.12	11.2	4.7		200	150
WSPTF15	13.6	4	31	50	51	7			40	4.5	8	4.4	720	1289	3.2	3.4	6.8	39	265.7	111
SLF020	20	2	35	56	58	10	18	2	45	5.5	9.5	5.4	724	1109	7.9	12.09	5.53	38	303	2.44
WSPTF20	18.2	4	35	63	58	9			45	5.5	9.5	5.4	1039	1819	5.8	5.7	11.8	70	392.5	202

www.wontec.com.cn万臣

XZ Pipetting Arm

WT12201

Scan the QR code to download
3D models & application scenarios

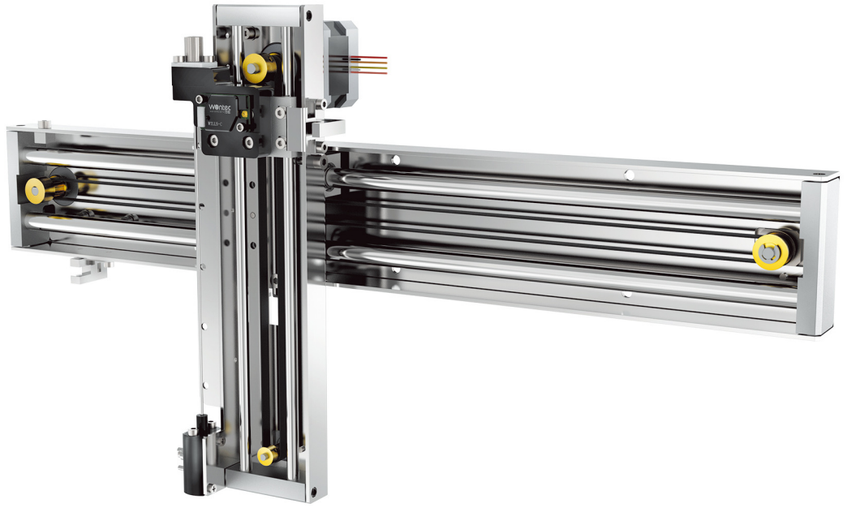

Product Features

PRODUCT ADVANTAGES

All-sheet-metal body, light and elegant; works with swabs and piercing needles. Simple, economical design greatly cuts build cost. Widely used as a sampling arm in fully automated testing equipment.

Dimensions

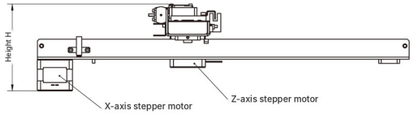

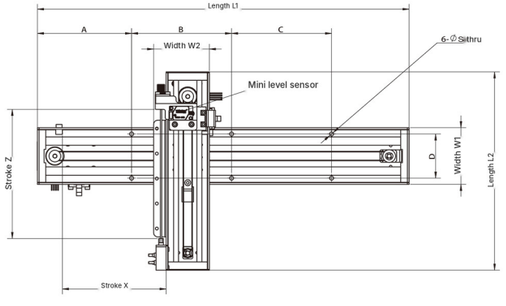

Specifications

Item	Value
Stroke X (mm)	366 (customizable)
Stroke Z (mm)	151 (customizable)
Length L1 (mm)	446（L1=80+X）
Length L2 (mm)	238（L2=87+Z）
Height H (mm)	104.2
Width W1 (mm)	68
Width W2 (mm)	67
Mounting dim. A (mm)	113
Mounting dim. B (mm)	120
Mounting dim. C (mm)	120
Mounting dim. D (mm)	53
Mounting hole S	4.8
X-axis drive	MXL timing pulley & belt
Z-axis drive	MXL timing pulley & belt
Surface treatment	Mirror finish
Main material	SUS304
Module weight (kg)	1.85

www.wontec.com.cn万臣

ZR Sampling Module

WT03402

Scan the QR code to download
3D models & application scenarios



Specifications

Item	Value
Stroke Z (mm)	80 (customizable)
Rotation a (± deg)	180
Height H (mm)	243
Width (mm)	50
Length L (mm)	141
Spline shaft dia. D (mm)	12
Mounting dim. A (mm)	40
Mounting dim. B (mm)	40
Mounting dim. C (mm)	5
Mounting hole S	4.2
Z-axis drive	Timing pulley & belt
R-axis drive	Timing pulley & belt
R-axis gear ratio	1:3.6
Surface treatment	Anodized
Main material	Aluminum alloy
Z accuracy (mm)	0.05
R accuracy (arcmin)	3
Module weight (kg)	1.85

Product Features

PRODUCT ADVANTAGES

Features an industry-first passive power-off anti-drop function on the Z-axis. Both Z and R axes are driven by stepper motors; the R-axis uses belt reduction for higher rotary torque. The compact module is widely used in medical sampling arms. All dimensions and technical parameters can be tailored to customer requirements.

Dimensions

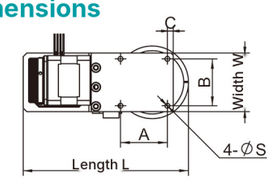

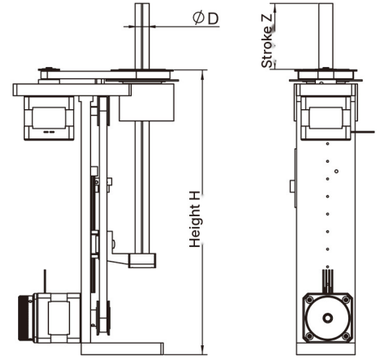

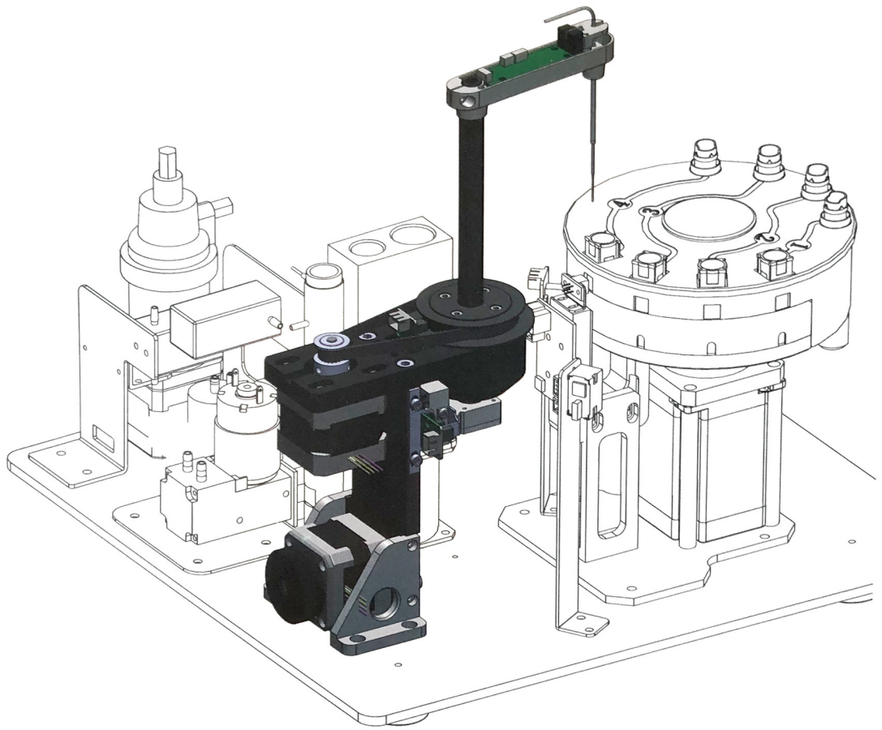

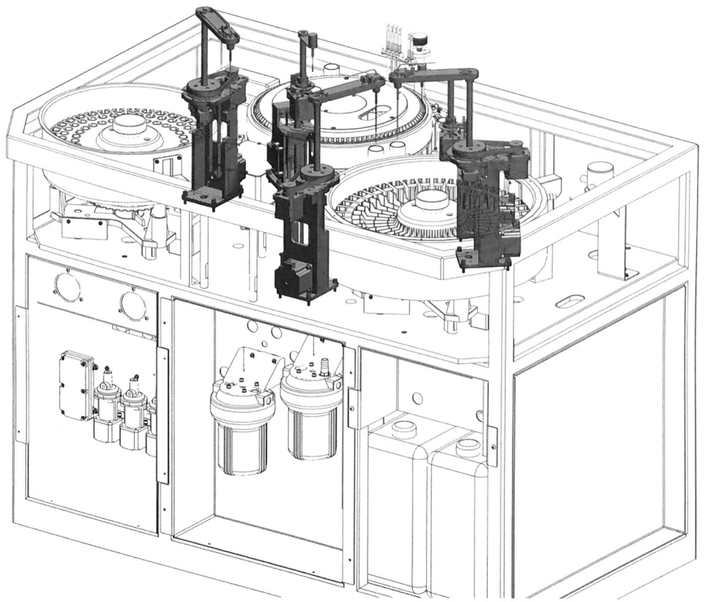

Scan the QR code to view and download documentation

Precision Bearings



We are a distributor of Japan's EZO high-precision bearings, including miniature, thin-section, flanged, stainless-steel and thrust bearings, with bore diameters from 0.6 mm to 90 mm for all kinds of precision medical devices. Guided by real market demand, we are committed to meeting customers' special application requirements.

Miniature bearings: MR63ZZ, MR74ZZ, MR105, MR126, 694ZZ, 696ZZ, 605ZZ, 627ZZ

Flanged bearings: MF63ZZ, MF74ZZ, MF85, MF105ZZ, F694ZZ, F696ZZ, F605ZZ, F627ZZ

Stainless-steel bearings: SMR63ZZ, SS694ZZ, SSF693ZZ, SSF697ZZ, 6000H, 6200H, 6007H, 6300H

Thin-section bearings: 6700ZZ, 6804ZZ, 6807ZZ, 6808ZZ, 6812ZZ, 6900ZZ, ET2015, ER1212

Thrust bearings: F3-8M, F4-9M, F5-12M, F6-12M, F10-18M, F2X-7, F8-16, F9-17, F10-18

Detailed selection data can be downloaded from our website.

wontec
www.wontec.com.cn万臣

Ultrasound Trackballs

Scan the QR code to download
3D models & application scenarios

Wontec embedded trackballs offer high reliability and a complete range, making them the first choice for demanding medical and industrial control equipment.

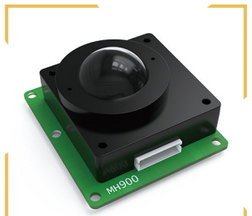

JS19(IP54)


JS25(IP54)


JS30(IP54)


JS36A(IP54)


JS36B(IP65)


JS36C(IP54)


JS36D(IP54)


JS38(IP54)


JS38A(IP54)


JS50A(IP54)

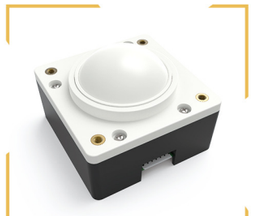
JS50B(IP65)

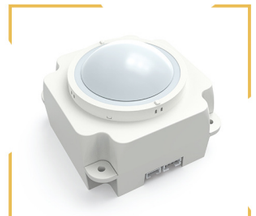
JS50E(IP65)

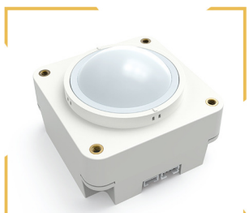
JS50F(IP65)

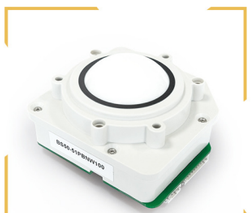
BS50(IP65)


BS50A(IP65)


PS50(IP54)

Ordering Code

LS	16	—	5	1	P	B	N	B	1	0	0
Product series	**Ball size**		**Interface type**	**Connector option**	**Ball material**	**Ball surface finish**	**Ball weight**	**Ball color**	**Parts around the ball**	**Backlight required**	**Other customization**
JS、BS、LS…	16、19、25、36、38、50、75…		1 – Square wave 2—RS232 3—PS/2 4—USB 5—PS/2&USB 6 – Square wave & PS/2 7 – Other	1 – Standard 2 – Custom	P – Phenolic resin S – Stainless steel O – Other	B – Glossy C – Matte	L – Light N – Standard W – Weighted	W – Milky white B – Black C – Custom	(wiper ring, top cover, twist cap, etc.) Color: 1 – Standard 2 – Custom	0 – No 1 – Yes	0 – No 1 – Yes

Overview

Wontec embedded trackballs offer high reliability and a complete range, making them the first choice for demanding medical and industrial control equipment.

Operating conditions

- Temperature: -10 °C to +60 °C
- Humidity: 30%–95% (non-condensing)

Atmospheric pressure: 700 to 1060 hPa

Mounting angle: max. 60° from horizontal

Storage & transport conditions

- Temperature: -25 °C to +80 °C
- Humidity: 30%–95% (non-condensing)

Atmospheric pressure: 700 to 1060 hPa

Vibration: 5 G, 5 Hz to 2 kHz, any plane